HP LaserJet 3390/3392
All-in-One Service Manual

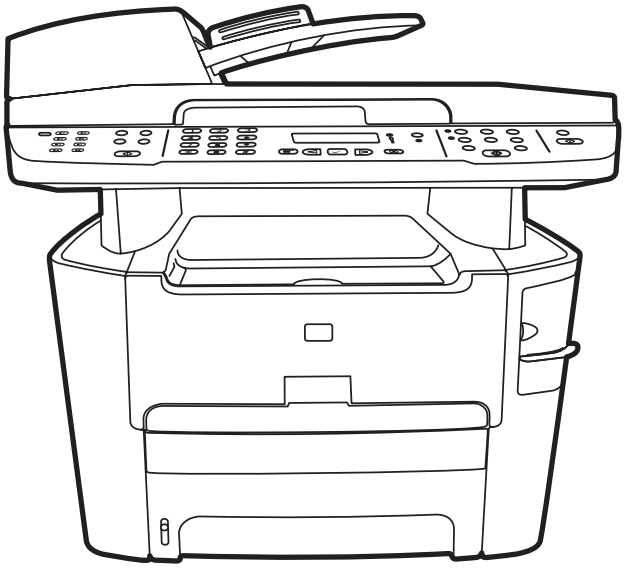

Download Free Service Manual and Resetter Printer at http://printer1.blogspot.com

Download Free Service Manual and Resetter Printer at http://printer1.blogspot.com

HP LaserJet 3390 all-in-one and LaserJet HP 3392 all-in-one

Service Manual

Download Free Service Manual and Resetter Printer at http://printer1.blogspot.com

Copyright information

© 2005 Copyright Hewlett-Packard Development Company, L.P.

Reproduction, adaptation, or translation without prior written permission is prohibited, except as allowed under the copyright laws.

The information contained herein is subject to change without notice.

The only warranties for HP products and services are set forth in the express warranty statements accompanying such products and services. Nothing herein should be construed as constituting an additional warranty. HP shall not be liable for technical or editorial errors or omissions contained herein.

Part number Q6500-90901

Edition 1, 10/2005

Safety information

WARNING!

Potential Shock Hazard

Always follow basic safety precautions when using the all-in-one to reduce risk of injury from fire or electric shock.

Read and understand all instructions in the user guide.

Observe all warnings and instructions marked on the all-in-one.

Use only a grounded electrical outlet when connecting the all-in-one to a power source. If you do not know whether the outlet is grounded, check with a qualified electrician.

Do not touch the contacts on the end of any of the sockets on the all-in-one. Replace damaged cords immediately.

Unplug the all-in-one from wall outlets before cleaning.

Do not install or use the all-in-one near water or when you are wet.

Install the product securely on a stable surface.

Install the all-in-one in a protected location where no one can step on or trip over the power cord and where the power cord will not be damaged.

If the all-in-one does not operate normally, see the online user guide.

Refer all servicing questions to qualified personnel.

Information regarding FCC Class B, Parts 15 and 68 requirements can be found in the user guide.

Trademark credits

Microsoft® and Windows® are U.S. registered trademarks of Microsoft Corporation.

Linux is a U.S. registered trademark of Linus Torvalds.

UNIX® is a registered trademark of The Open Group.

Energy Star® and the Energy Star logo® are U.S. registered marks of the United States Environmental Protection Agency.

Download Free Service Manual and Resetter Printer at http://printer1.blogspot.com

FCC Regulations

This equipment has been tested and found to comply with the limits for a Class B digital device, pursuant to Part 15 of the FCC rules. These limits are designed to provide reasonable protection against harmful interference in a residential installation. This equipment generates, uses, and can radiate radio frequency energy. If this equipment is not installed and used in accordance with the instructions, it may cause harmful interference to radio communications. However, there is no guarantee that interference will not occur in a particular installation. If this equipment does cause harmful interference to radio or television reception, which can be determined by turning the equipment off and on, the user is encouraged to try to correct the interference by one or more of the following measures:

Reorient or relocate the receiving antenna.

Increase separation between equipment and receiver.

Connect equipment to an outlet on a circuit different from that to which the receiver is located.

Consult your dealer or an experienced radio/ TV technician.

Any changes or modifications to the printer that are not expressly approved by HP could void the user's authority to operate this equipment.

Use of a shielded interface cable is required to comply with the Class B limits of Part 15 of FCC rules.

This equipment complies with FCC rules, Parts 15 and 68. On the back of this equipment is a label that contains, among other information, the FCC registration number and ringer equivalence number (REN) for this equipment. If requested, this information must be provided to the telephone company. The REN is used to determine the quantity of devices which may be connected to the telephone line. Excessive RENs on the telephone line may result in the devices not ringing in response to an incoming call. In most, but not all, areas, the sum of the RENs should not exceed five (5.0). To be certain of the number of devices that may be connected to the line, as determined by the total RENs, contact the telephone company to determine the maximum REN for the calling area.

This equipment uses the following USOC jacks: RJ11C.

An FCC-compliant telephone cord and modular plug is provided with this equipment. This equipment is designed to be connected to the telephone network or premises wiring using a compatible modular jack which is Part 68 compliant. This equipment cannot be used on telephone company-provided coin service. Connection to Party Line Service is subject to state tariffs. If this equipment causes harm to the telephone network, the telephone company will notify you in advance that temporary discontinuance of service may be required. If advance notice is not practical, the telephone company will notify the customer as soon as possible. Also, you will be advised of your right to file a complaint with the FCC if you believe it is necessary. The telephone company may make changes in its facilities, equipment, operations, or procedures that could affect the operation of the equipment. If this happens, the telephone company will provide advance notice in order for you to make the necessary modifications in order to maintain uninterrupted service. If trouble is experienced with this equipment, please see the numbers in the front of this manual for repair and (or) warranty information. If the trouble is causing harm to the telephone network, the telephone company may request you remove the equipment from the network until the problem is resolved. The following repairs can be done by the customer: Replace any original equipment that came with the device. This includes the print cartridge, the supports for trays and bins, the power cord, and the telephone cord. It is recommended that the customer install an ac surge arrestor in the ac outlet to which this device is connected. This is to avoid damage to the equipment caused by local lightning strikes and other electrical surges.

See the electronic user guide for more regulatory information.

Q6500-90901

Download Free Service Manual and Resetter Printer at http://printer1.blogspot.com

Download Free Service Manual and Resetter Printer at http://printer1.blogspot.com

Table of contents

1 All-in-one information

Quick access to all-in-one information....2
All-in-one configurations....3
All-in-one features....5
Walkaround....7
HP LaserJet 3390/3392 all-in-one....7
Interface ports....9
Control panel....9
Model and serial numbers....10
Software description....11
Supported drivers....11
Additional drivers....11
Software for Windows....12
Windows software components....12
HP ToolboxFX....12
Embedded Web server (EWS)....12
Software for Macintosh....13
Macintosh software components....13
HP Director....13
Macintosh Configure Device (Mac OS X V10.3 and Mac OS X V10.4)....13
PDEs (Mac OS X V10.3 and Mac OS X V10.4)....14
Uninstalling software....15
Windows....15
Macintosh....15
Media specifications....16
Supported media weights and sizes....16
Media to avoid....17
Media that can damage the all-in-one....18

2 Installation

Operating environment....20
Minimum system requirements....21
Unpacking....22
Installing input devices....23
ADF input tray....23
250-sheet input tray (tray 3)....23
Installing the control-panel faceplate....25
Loading media....26
Loading documents onto the flatbed scanner or into the ADF....26

Download Free Service Manual and Resetter Printer at http://printer1.blogspot.com

Loading the single-sheet priority input slot (tray 1)....28
Loading tray 2 or optional tray 3....28
Installing accessories....30
Removing and replacing a DIMM....30

3 Maintenance

Managing supplies....34
Life expectancies of supplies and the all-in-one....34
Ordering supplies....34
Storing supplies....34
Replacing and recycling supplies....35
Replacing the print cartridge....37
Replacing the staple cassette....40
Replacing the tray 2 pickup roller....42
Replacing the tray 2 and optional tray 3 separation pad....47
Replacing the ADF pickup-roller assembly....50
HP policy on non-HP supplies....54
Resetting the all-in-one for non-HP supplies....54
HP fraud hotline....54
Cleaning the all-in-one....56
Cleaning the flatbed scanner glass....56
Cleaning the scanner-cover backing....57
Cleaning the tray 2 pickup roller 58
Cleaning the ADF pickup-roller assembly....62
Cleaning the print path....65
Managing the all-in-one....67
Information pages....67
Using the HP ToolboxFX....70
To view the HP ToolboxFX....70
Status....70
Event log....71
Alerts....71
Set up status alerts....71
Set up e-mail alerts....71
Fax....72
Fax tasks....72
Fax phone book....72
Fax send log....75
Fax receive log....75
Help (Documentation)....75
System settings....76
Device information....76
Paper handling....77
Print quality....77
Paper types....77
System setup....78
Service....78
Device Polling....78
Print settings....78
Printing....78

Download Free Service Manual and Resetter Printer at http://printer1.blogspot.com

PCL 5e....79
PostScript....79
Network settings....79
Using Macintosh Configure Device (Mac OS X V10.3 and Mac OS X V10.4)....80
Understanding the Embedded Web server....81
Features....81

4 Theory of operation

Basic operation....84
Sequence of operation for the base unit....84
Internal components (base unit)....86
Engine control system....88
Laser/scanner system....90
Pickup/feed/delivery system....91
Image-formation system....93
Scanner and ADF functions and operation....97
Scanner functions....97
Scanner operation....97
ADF operation....98
ADF paper path and ADF sensors....98
ADF jam detection....99
Fax functions and operation....100
PSTN operation....100
To receive faxes when you hear fax tones....100
Distinctive ring function....100
The fax subsystem....101
Formatter in the fax subsystem....101
LIU in the fax subsystem....101
Safety isolation....102
Safety-protection circuitry....102
Data path....102
Hook state....103
Downstream current detection....103
Hook switch control....103
Ring detect....103
Line current control....103
Billing (metering) tone filters....104
Fax page storage in flash memory....104
Stored fax pages....104
Advantages of flash memory storage....104

5 Removal and replacement

Introduction....108
Removal and replacement strategy....108
Electrostatic discharge....108
User-replaceable parts....109
Required tools....109
Before performing service....109
After performing service....109
Post-service tests....110

Download Free Service Manual and Resetter Printer at http://printer1.blogspot.com

Test 1 (print-quality test)....110
Test 2 (copy-quality test)....110
Test 3 (fax-quality test)....111
Parts-removal order....112
Remove the print cartridge....113
External panels, covers, and doors....114
Right cover....114
Left cover....116
Print-cartridge door....118
Rear cover....120
Top cover....122
ADF assembly....124
Scanner assembly....126
Bezel and control panel....128
Internal assemblies....131
Convenience-stapler assembly (HP LaserJet 3392 only)....131
Convenience-stapler power supply (HP LaserJet 3392 only)....132
Convenience-stapler ac inlet cable (HP LaserJet 3392 only)....134
Convenience-stapler power supply bracket and strap (HP LaserJet 3392 only)....135
Speaker....136
Power-switch PCA....138
Formatter....139
Duplex assembly....142
Laser/scanner....144
Memory-tag-reader assembly....146
Fuser....148
Fan....148
Duplex-drive gears....150
Duplex solenoid....151
Fuser....153
Interlock assembly....159
ECU....160
Main motor....165
Pickup-and-feed assemblies....167
Transfer roller....167
Registration-roller assembly....168
Main gear assembly and tray 2 pickup solenoid....169

6 Troubleshooting

Troubleshooting process....174
Troubleshooting checklist....174
Jams....177
Causes of jams....177
Tips to avoid jams....177
Where to look for jams....178
Jams in the print-cartridge area....179
Jams in the trays....181
Jams in the output bin....187
Jams in the straight-through output path....188
Jams in the duplex path....190

Download Free Service Manual and Resetter Printer at http://printer1.blogspot.com

Jams in the ADF....195
Jams in the convenience stapler (HP LaserJet 3392 only)....200
Control-panel messages....203
Alert and warning messages....203
Alert and warning message tables....203
Critical-error message-tables....208
Print problems....211
Print-quality problems....211
Improving print quality....211
Understanding print-quality settings....211
To temporarily change print-quality settings....211
To change print-quality settings for all future jobs....211
Identifying and correcting print defects....212
Print-quality checklist....212
General print-quality issues....212
Media-handling problems....217
Print-media guidelines....217
Solving print-media problems....217
Performance problems....218
Fax problems....220
Problems receiving faxes....220
Problems sending faxes....222
Voice-call problems....223
Media-handling problems....224
Performance problems....225
Copy problems....226
Preventing problems....226
Image problems....226
Media-handling problems....227
Performance problems....229
Scan problems....230
Solving scanned-image problems....230
Scan-quality problems....232
Preventing problems....232
Solving scan-quality problems....232
Scan-specific error messages....233
Control-panel display problems....234
Convenience-stapler problems (HP LaserJet 3392 only)....234
DSL problems....235
PABX line problems....235
ADF problems....236
Functional checks....238
Drum rotation test....238
Engine test....238
Half self-test functional check....239
To perform a half self-test check....239
To perform other checks 240
Heating element check....240
High-voltage contacts check....240
To check the print-cartridge contacts 240

Download Free Service Manual and Resetter Printer at http://printer1.blogspot.com

To check the high-voltage connector assembly 241
Service-mode functions....242
NVRAM initialization....242
Secondary service menu....242
Troubleshooting tools....244
All-in-one pages and reports....244
Demo page....244
Configuration page....244
Supplies Status page....244
Fax reports....245
Fax activity log....245
Fax call report....245
Phone book report....245
Billing-code report....246
HP ToolboxFX....246
To view HP ToolboxFX....246
Troubleshooting tab....246
Service menu 247
Restoring the factory-set defaults....247
Cleaning the paper path....247
T.30 protocol trace....248
Archive print....248
Firmware updates and recovery....249
Firmware update by using a flash executable file....249
Firmware-recovery DIMM....249

7 Parts

Accessories and ordering information....253
Supplies....254
Memory....254
Cable and interface accessories....254
Paper-handling accessories 255
Scanner/ADF replacement parts....256
Control-panel bezels....257
Supplementary documentation and support....258
Troubleshooting diagrams....261
Repetitive image defects....261
Interface connectors 262
Formatter connectors....263
Line interface unit (LIU)....264
Solenoids....264
Switches and sensors....265
Rollers and pads....266
PCAs (base unit)....267
Major components (base unit)....268
Scanner and ADF....269
Circuit diagram....270
How to use the parts lists and diagrams....271
Types of screws....271
Scanner and ADF assemblies....272

Download Free Service Manual and Resetter Printer at http://printer1.blogspot.com

Scanner components....274
ADF components....276
Convenience stapler components (HP LJ 3392 only)....278
Formatter, LIU, HP jewel, and nameplate....280
External covers and panels....282
Internal components (1 of 4)....284
Internal components (2 of 4)....286
Internal components (3 of 4)....288
Internal components (4 of 4)....290
Engine-controller assembly....292
Main-drive assembly....294
Duplexing-drive assembly....296
Tray 2 cassette and tray 3 cassette/feeder....298
Duplexing assembly....300
Fuser assembly....302
Alphabetical parts list....304
Numerical parts list....309

Appendix A All-in-one specifications

Physical specifications....316
Supplies specifications....317
Performance....318
Electrical specifications....320
Power consumption....321
Environmental specifications....322
Acoustic emissions....323

Appendix B Warranty information

Hewlett-Packard limited warranty statement....326
Print Cartridge Limited Warranty Statement....327
Extended warranty....328

Appendix C Regulatory statements

Declaration of conformity (HP LaserJet 3390, 3392, 3055, and 3050)....330
Country/region-specific safety statements....331
Laser safety statement....331
Canadian DOC statement....331
Korean EMI statement....331
Finnish laser statement....332
Japan power cord statement....332

Index....333

Download Free Service Manual and Resetter Printer at http://printer1.blogspot.com

Download Free Service Manual and Resetter Printer at http://printer1.blogspot.com

List of tables

Table 1-1 All-in-one guides....2
Table 1-2 All-in-one features....3
Table 1-3 HP LaserJet 3090/3092 all-in-one features....5
Table 1-4 Supported printer drivers....11
Table 1-5 Priority input slot (tray 1) media specifications....16
Table 1-6 Tray 2 and optional tray 3....16
Table 1-7 ADF....17
Table 4-1 Sequence of operation....84
Table 4-2 Power-on sequence....85
Table 6-1 Alert and warning messages....203
Table 6-2 Critical-error messages....209
Table 6-3 Scan-specific error messages....233
Table 7-1 Control-panel bezels....257
Table 7-2 Service and training support....258
Table 7-3 User guides....258
Table 7-4 Getting started guide....258
Table 7-5 Technical support Web sites....259
Table 7-6 Repetitive image defects....261
Table 7-7 Scanner and ADF assemblies....273
Table 7-8 Scanner components....275
Table 7-9 ADF components....277
Table 7-10 Convenience stapler components (HP LJ 3392 only)....279
Table 7-11 Formatter, LIU, HP jewel, and nameplate....281
Table 7-12 External covers and panels....283
Table 7-13 Internal components (1 of 4)....285
Table 7-14 Internal components (2 of 4)....287
Table 7-15 Internal components (3 of 4)....289
Table 7-16 Internal components (4 of 4)....291
Table 7-17 Engine-controller assembly....293
Table 7-18 Main-drive assembly....295
Table 7-19 Duplexing-drive assembly....297
Table 7-20 Cassette, tray 2 (250-sheet)....299
Table 7-21 Duplexing assembly....301
Table 7-22 Fuser assembly....303
Table 7-23 Alphabetical parts list....304
Table 7-24 Numerical parts list....309
Table A-1 Physical specifications....316
Table A-2 Supplies specifications....317
Table A-3 Performance....318
Table A-4 Electrical specifications....320

Download Free Service Manual and Resetter Printer at http://printer1.blogspot.com

Table A-5 Power consumption (average, in watts) 321
Table A-6 Environmental specifications 322
Table A-7 Acoustic emissions.....323

Download Free Service Manual and Resetter Printer at http://printer1.blogspot.com

List of figures

Figure 1-1 HP LaserJet 3390/3392 all-in-one....3
Figure 1-2 Front view....7
Figure 1-3 Back view....8
Figure 1-4 Interface ports....9
Figure 1-5 Control panel....9
Figure 1-6 HP LaserJet 3090/3092 all-in-one identification label....10
Figure 2-1 Operating environment....20
Figure 2-2 HP LaserJet 3390/3392 all-in-one package contents....22
Figure 2-3 Install the ADF input tray....23
Figure 2-4 Install the 250-sheet input tray....24
Figure 2-5 Install the control-panel faceplate....25
Figure 2-6 Load a document onto the flatbed scanner....26
Figure 2-7 Load documents into the ADF (1 of 2)....27
Figure 2-8 Load documents into the ADF (2 of 2)....27
Figure 2-9 Load the single-sheet priority input slot (tray 1)....28
Figure 2-10 Loading tray 2 or tray 3 (1 of 3)....28
Figure 2-11 Load tray 2 or tray 3 (2 of 3)....29
Figure 2-12 Load tray 2 or tray 3 (3 of 3)....29
Figure 2-13 Removing and replacing a DIMM (1 of 4)....30
Figure 2-14 Removing and replacing a DIMM (2 of 4)....30
Figure 2-15 Removing and replacing a DIMM (3 of 4)....31
Figure 2-16 Removing and replacing a DIMM (4 of 4)....31
Figure 3-1 Replace the print cartridge (1 of 5)....37
Figure 3-2 Replace the print cartridge (2 of 5)....37
Figure 3-3 Replace the print cartridge (3 of 5)....38
Figure 3-4 Replace the print cartridge (4 of 5)....38
Figure 3-5 Replace the print cartridge (5 of 5)....39
Figure 3-6 Install the staple cassette (1 of 4)....40
Figure 3-7 Install the staple cassette (2 of 4)....40
Figure 3-8 Install the staple cassette (3 of 4)....41
Figure 3-9 Install the staple cassette (4 of 4)....41
Figure 3-10 Replace the tray 2 pickup roller (1 of 7)....42
Figure 3-11 Replace the tray 2 pickup roller (2 of 7)....43
Figure 3-12 Replace the tray 2 pickup roller (3 of 7)....43
Figure 3-13 Replace the tray 2 pickup roller (4 of 7)....44
Figure 3-14 Replace the tray 2 pickup roller (5 of 7)....44
Figure 3-15 Replace the tray 2 pickup roller (6 of 7)....45
Figure 3-16 Replace the tray 2 pickup roller (7 of 7)....45
Figure 3-17 Replace the tray 2 or tray 3 separation pad (1 of 6)....47
Figure 3-18 Replace the tray 2 or tray 3 separation pad (2 of 6)....47

Download Free Service Manual and Resetter Printer at http://printer1.blogspot.com

Figure 3-19 Replace the tray 2 or tray 3 separation pad (3 of 6)....48
Figure 3-20 Replace the tray 2 or tray 3 separation pad (4 of 6)....48
Figure 3-21 Replace the tray 2 or tray 3 separation pad (5 of 6)....49
Figure 3-22 Replace the tray 2 or tray 3 separation pad (6 of 6)....49
Figure 3-23 Replacing the ADF pickup-roller assembly (1 of 9)....50
Figure 3-24 Replacing the ADF pickup-roller assembly (2 of 9)....50
Figure 3-25 Replacing the ADF pickup-roller assembly (3 of 9)....51
Figure 3-26 Replacing the ADF pickup-roller assembly (4 of 9)....51
Figure 3-27 Replacing the ADF pickup-roller assembly (5 of 9)....52
Figure 3-28 Replacing the ADF pickup-roller assembly (6 of 9)....52
Figure 3-29 Replacing the ADF pickup-roller assembly (7 of 9)....53
Figure 3-30 Replacing the ADF pickup-roller assembly (8 of 9)....53
Figure 3-31 Replacing the ADF pickup-roller assembly (9 of 9)....54
Figure 3-32 Cleaning the scanner glass (1 of 2)....56
Figure 3-33 Cleaning the scanner glass (2 of 2)....57
Figure 3-34 Cleaning the scanner-cover backing....57
Figure 3-35 Cleaning the tray 2 pickup roller (1 of 6)....58
Figure 3-36 Cleaning the tray 2 pickup roller (2 of 6)....58
Figure 3-37 Cleaning the tray 2 pickup roller (3 of 6)....59
Figure 3-38 Cleaning the tray 2 pickup roller (4 of 6)....59
Figure 3-39 Cleaning the tray 2 pickup roller (5 of 6)....60
Figure 3-40 Cleaning the tray 2 pickup roller (6 of 6)....60
Figure 3-41 Cleaning the ADF pickup-roller assembly (1 of 7)....62
Figure 3-42 Cleaning the ADF pickup-roller assembly (2 of 7)....62
Figure 3-43 Cleaning the ADF pickup-roller assembly (3 of 7)....63
Figure 3-44 Cleaning the ADF pickup-roller assembly (4 of 7)....63
Figure 3-45 Cleaning the ADF pickup-roller assembly (5 of 7)....64
Figure 3-46 Cleaning the ADF pickup-roller assembly (6 of 7)....64
Figure 3-47 Cleaning the ADF pickup-roller assembly (7 of 7)....65
Figure 3-48 Cleaning the print path....65
Figure 4-1 HP LaserJet 3390/3392 all-in-one system block diagram....84
Figure 4-2 Internal components (base unit)....86
Figure 4-3 Engine control system....88
Figure 4-4 Engine-control-system circuit diagram....89
Figure 4-5 Laser/scanner system....90
Figure 4-6 Pickup/feed/delivery system....92
Figure 4-7 Image-formation system....93
Figure 4-8 Primary charging....93
Figure 4-9 Developing....94
Figure 4-10 Transfer....95
Figure 4-11 Separation....95
Figure 4-12 Fusing....96
Figure 4-13 Drum cleaning....96
Figure 4-14 Optical system....97
Figure 4-15 ADF paper path....98
Figure 5-1 Phillips and pozidrive screwdriver comparison....109
Figure 5-2 Parts-removal tree....112
Figure 5-3 Remove the print cartridge (1 of 2)....113
Figure 5-4 Remove the print cartridge (2 of 2)....113
Figure 5-5 Remove the right cover (1 of 4)....114

Download Free Service Manual and Resetter Printer at http://printer1.blogspot.com

Figure 5-6 Remove the right cover (2 of 4)....114
Figure 5-7 Remove the right cover (3 of 4)....115
Figure 5-8 Remove the right cover (4 of 4)....115
Figure 5-9 Remove the left cover (1 of 3)....116
Figure 5-10 Remove the left cover (2 of 3)....116
Figure 5-11 Remove the left cover (3 of 3)....117
Figure 5-12 Removing the print-cartridge door (1 of 2)....118
Figure 5-13 Removing the print-cartridge door (2 of 2)....119
Figure 5-14 Remove the rear cover (1 of 2)....120
Figure 5-15 Remove the rear cover (2 of 2)....121
Figure 5-16 Remove the top cover (1 of 3)....122
Figure 5-17 Remove the top cover (2 of 3)....122
Figure 5-18 Remove the top cover (3 of 3)....123
Figure 5-19 Remove the scanner/ADF assembly (1 of 3)....124
Figure 5-20 Remove the scanner/ADF assembly (2 of 3)....124
Figure 5-21 Remove the scanner/ADF assembly (3 of 3)....125
Figure 5-22 Remove the scanner/ADF assembly (1 of 3)....126
Figure 5-23 Remove the scanner/ADF assembly (2 of 3)....126
Figure 5-24 Remove the scanner/ADF assembly (3 of 3)....127
Figure 5-25 Remove the bezel and control panel (1 of 4)....128
Figure 5-26 Remove the bezel and control panel (2 of 4)....128
Figure 5-27 Remove the bezel and control panel (3 of 4)....129
Figure 5-28 Remove the bezel and control panel (4 of 4)....130
Figure 5-29 Remove the convenience-stapler assembly (1 of 2)....131
Figure 5-30 Remove the convenience-stapler assembly (2 of 2)....131
Figure 5-31 Remove the convenience-stapler power assembly (1 of 3)....132
Figure 5-32 Remove the convenience-stapler power assembly (2 of 3)....132
Figure 5-33 Remove the convenience-stapler power assembly (3 of 3)....133
Figure 5-34 Remove the convenience-stapler ac inlet cable....134
Figure 5-35 Remove the convenience-stapler bracket and strap....135
Figure 5-36 Remove the speaker (1 of 2)....136
Figure 5-37 Remove the speaker (2 of 2)....137
Figure 5-38 Remove the power-switch PCA (HP LaserJet 3392 shown)....138
Figure 5-39 Remove the formatter (1 of 3)....139
Figure 5-40 Remove the formatter (2 of 3)....140
Figure 5-41 Remove the formatter (3 of 3)....141
Figure 5-42 Remove the duplex assembly (1 of 3)....142
Figure 5-43 Remove the duplex assembly (2 of 3)....142
Figure 5-44 Remove the duplex assembly (3 of 3)....143
Figure 5-45 Remove the laser/scanner assembly....145
Figure 5-46 Remove the memory-tag-reader assembly (1 of 2)....146
Figure 5-47 Remove the memory-tag-reader assembly (2 of 2)....147
Figure 5-48 Remove the fan (1 of 2)....148
Figure 5-49 Remove the fan (2 of 2)....149
Figure 5-50 Remove the duplex-drive gears....150
Figure 5-51 Remove the duplex solenoid (1 of 2)....151
Figure 5-52 Remove the duplex solenoid (2 of 2)....152
Figure 5-53 Remove the fuser (1 of 11)....153
Figure 5-54 Remove the fuser (2 of 11)....154
Figure 5-55 Remove the fuser (3 of 11)....154

Download Free Service Manual and Resetter Printer at http://printer1.blogspot.com

Figure 5-56 Remove the fuser (4 of 11)....155
Figure 5-57 Remove the fuser (5 of 11)....155
Figure 5-58 Remove the fuser (6 of 11)....156
Figure 5-59 Remove the fuser (7 of 11)....156
Figure 5-60 Remove the fuser (8 of 11)....157
Figure 5-61 Remove the fuser (9 of 11)....157
Figure 5-62 Remove the fuser (10 of 11)....158
Figure 5-63 Remove the fuser (11 of 11)....158
Figure 5-64 Remove the interlock assembly (1 of 2)....159
Figure 5-65 Remove the interlock assembly (2 of 2)....159
Figure 5-66 Remove the ECU (1 of 8)....161
Figure 5-67 Remove the ECU (2 of 8)....161
Figure 5-68 Remove the ECU (3 of 8)....162
Figure 5-69 Remove the ECU (4 of 8)....162
Figure 5-70 Remove the ECU (5 of 8)....163
Figure 5-71 Remove the ECU (6 of 8)....163
Figure 5-72 Remove the ECU (7 of 8)....164
Figure 5-73 Remove the ECU (8 of 8)....164
Figure 5-74 Remove the main motor (1 of 2)....165
Figure 5-75 Remove the main motor (2 of 2)....166
Figure 5-76 Remove the transfer roller....167
Figure 5-77 Remove the registration-roller assembly....168
Figure 5-78 Remove the main gear assembly (1 of 3)....169
Figure 5-79 Remove the main gear assembly (2 of 3)....170
Figure 5-80 Remove the main gear assembly (3 of 3)....170
Figure 5-81 Remove the tray 2 pickup solenoid (1 of 2)....171
Figure 5-82 Remove the tray 2 pickup solenoid (2 of 2)....171
Figure 6-1 Jams in the print-cartridge area (1 of 5)....179
Figure 6-2 Jams in the print-cartridge area (2 of 5)....180
Figure 6-3 Jams in the print-cartridge area (3 of 5)....180
Figure 6-4 Jams in the print-cartridge area (4 of 5)....181
Figure 6-5 Jams in the print-cartridge area (5 of 5)....181
Figure 6-6 Jams in the trays (1 of 10)....182
Figure 6-7 Jams in the trays (2 of 10)....182
Figure 6-8 Jams in the trays (3 of 10)....183
Figure 6-9 Jams in the trays (4 of 10)....183
Figure 6-10 Jams in the trays (5 of 10)....184
Figure 6-11 Jams in the trays (6 of 10)....184
Figure 6-12 Jams in the trays (7 of 10)....185
Figure 6-13 Jams in the trays (8 of 10)....185
Figure 6-14 Jams in the trays (9 of 10)....186
Figure 6-15 Jams in the trays (10 of 10)....186
Figure 6-16 Jams in the output bin....187
Figure 6-17 Jams in the straight-through output path (1 of 4)....188
Figure 6-18 Jams in the straight-through output path (2 of 4)....188
Figure 6-19 Jams in the straight-through output path (3 of 4)....189
Figure 6-20 Jams in the straight-through output path (4 of 4)....189
Figure 6-21 Jams in the duplex path (1 of 10)....190
Figure 6-22 Jams in the duplex path (2 of 10)....191
Figure 6-23 Jams in the duplex path (3 of 10)....191

Download Free Service Manual and Resetter Printer at http://printer1.blogspot.com

Figure 6-24 Jams in the duplex path (4 of 10)....192
Figure 6-25 Jams in the duplex path (5 of 10)....192
Figure 6-26 Jams in the duplex path (6 of 10)....193
Figure 6-27 Jams in the duplex path (7 of 10)....193
Figure 6-28 Jams in the duplex path (8 of 10)....194
Figure 6-29 Jams in the duplex path (9 of 10)....194
Figure 6-30 Jams in the duplex path (10 of 10)....195
Figure 6-31 Jams in the ADF (1 of 10)....195
Figure 6-32 Jams in the ADF (2 of 10)....196
Figure 6-33 Jams in the ADF (3 of 10)....196
Figure 6-34 Jams in the ADF (4 of 10)....197
Figure 6-35 Jams in the ADF (5 of 10)....197
Figure 6-36 Jams in the ADF (6 of 10)....198
Figure 6-37 Jams in the ADF (7 of 10)....198
Figure 6-38 Jams in the ADF (8 of 10)....199
Figure 6-39 Jams in the ADF (9 of 10)....199
Figure 6-40 Jams in the ADF (10 of 10)....200
Figure 6-41 Jams in the convenience stapler (1 of 5)....200
Figure 6-42 Jams in the convenience stapler (2 of 5)....201
Figure 6-43 Jams in the convenience stapler (3 of 5)....201
Figure 6-44 Jams in the convenience stapler (4 of 5)....202
Figure 6-45 Jams in the convenience stapler (5 of 5)....202
Figure 6-46 Engine test switch....239
Figure 6-47 Print-cartridge high-voltage connection points (right side)....241
Figure 6-48 Print-cartridge high-voltage connection points (left side)....241
Figure 7-1 Interface connectors....262
Figure 7-2 Formatter connectors....263
Figure 7-3 LIU connectors....264
Figure 7-4 Solenoids....264
Figure 7-5 Switches and sensors....265
Figure 7-6 Rollers and pads....266
Figure 7-7 PCAs (base unit)....267
Figure 7-8 Major components (base unit)....268
Figure 7-9 Scanner and ADF....269
Figure 7-10 Circuit diagram....270
Figure 7-11 Scanner and ADF assemblies....272
Figure 7-12 Scanner assemblies....274
Figure 7-13 ADF components....276
Figure 7-14 Convenience stapler components (HP LJ 3392 only)....278
Figure 7-15 Formatter, LIU, HP jewel, and nameplate....280
Figure 7-16 External covers and panels....282
Figure 7-17 Internal components (1 of 4)....284
Figure 7-18 Internal components (2 of 4)....286
Figure 7-19 Internal components (3 of 4)....288
Figure 7-20 Internal components (4 of 4)....290
Figure 7-21 Engine-controller assembly....292
Figure 7-22 Main-drive assembly....294
Figure 7-23 Duplexing-drive assembly....296
Figure 7-24 Tray 2 cassette and tray 3 cassette/feeder....298
Figure 7-25 Duplexing assembly....300

Download Free Service Manual and Resetter Printer at http://printer1.blogspot.com

Figure 7-26 Fuser assembly.....302

Download Free Service Manual and Resetter Printer at http://printer1.blogspot.com

1 All-in-one information

- Quick access to all-in-one information
- All-in-one configurations
- All-in-one features
- Walkaround
- Model and serial numbers
- Software description
- Software for Windows
- Software for Macintosh
- Uninstalling software
- Media specifications

Download Free Service Manual and Resetter Printer at http://printer1.blogspot.com

Quick access to all-in-one information

Use the following Web sites to find information about the all-in-one.

- HP LaserJet 3390 all-in-one: www.hp.com/support/lj3390
- HP LaserJet 3392 all-in-one: www.hp.com/support/lj3392

Table 1-1 All-in-one guides

Guide	Description
Getting started guide	Provides step-by-step instructions for installing and setting up the all-in-one.
User guide	Provides detailed information for using and troubleshooting the all-in-one. Available on the all-in-one CD or in **Program Group** if the software is installed on a computer.
HP ToolboxFX	To check the all-in-one status and settings and view troubleshooting information and online documentation, use the HP ToolboxFX. You must have performed a complete software installation in order to use the HP ToolboxFX. See the user guide for more information about software installation.
Online Help	Provides information about options that are available in the printer drivers. To view a Help file, open the online Help through the printer driver.

Download Free Service Manual and Resetter Printer at http://printer1.blogspot.com

All-in-one configurations

The all-in-one is available in the following configurations.

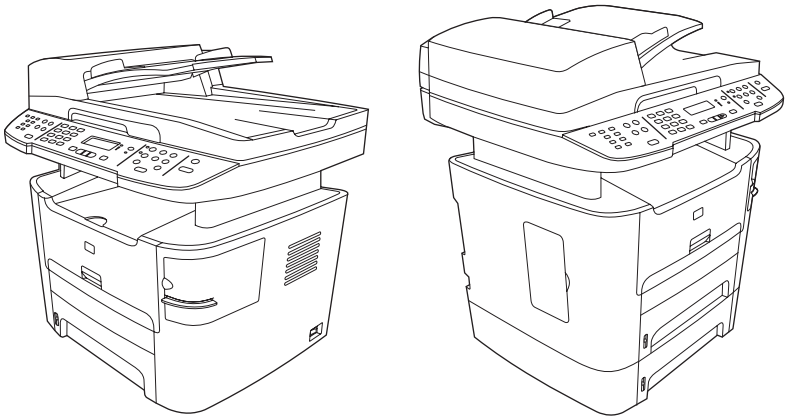

Figure 1-1 HP LaserJet 3390/3392 all-in-one

Table 1-2 All-in-one features

Model	Item
HP LaserJet 3390 all-in-one	• Prints letter-size and A4-size pages at speeds up to 22 pages-per-minute (ppm) • Includes PCL 5e and PCL 6 printer drivers and HP postscript level 3 emulation • Priority input slot (tray 1) for sheet-fed printing • The multipurpose tray (tray 2) holds up to 250-sheets of print media or 10 envelopes. • An optional 250-sheet input tray (tray 3) is available. • Automatic 2-sided (duplex) printing, receiving faxes, and copying • In accordance with ISO/IEC 19752, average yield for the standard black print cartridge is 2,500 pages.[1] • In accordance with ISO/IEC 19752, average yield for the high-capacity black print cartridge is 6,000 pages.[1] • Hi-Speed USB 2.0 port for connecting to a 10/100Base-T network • 64 MB RAM

Download Free Service Manual and Resetter Printer at http://printer1.blogspot.com

Table 1-2 All-in-one features (continued)

Model	Item
	• Flatbed scanner and 50-page automatic document feeder (ADF). • One available dual inline memory module (DIMM) slot for memory expansion and additional font support (memory expandable to 128 MB)
HP LaserJet 3392 all-in-one	The HP LaserJet 3392 all-in-one has all of the features of the HP LaserJet 3390 all-in-one plus: • An additional 250-sheet input tray (tray 3) • A convenience stapler

[1] Actual yield depends on specific use.

Download Free Service Manual and Resetter Printer at http://printer1.blogspot.com

All-in-one features

Table 1-3 HP LaserJet 3090/3092 all-in-one features

Feature	Description
Print quality	• 1200 dots per inch (dpi) with image REt 2400 text and graphics • Adjustable settings to optimize print quality • The HP UltraPrecise print cartridge has a finer toner formulation that provides sharper text and graphics.
Fax	Full-functionality fax capabilities with a V.34 fax; includes a phone book, fax polling, and delayed-fax features
Copy	Includes an ADF that accommodates faster, more efficient copy jobs with multiple-page documents.
Scan	• The HP LaserJet 3390/3392 all-in-one provides 1200 pixels per inch (ppi), 24-bit full color scanning from a letter/A4-size scanning glass. • The ADF accommodates faster, more efficient scan jobs with multiple-page documents
Staple	• The HP LaserJet 3392 all-in-one includes a convenience stapler for fast and convenient stapling of up to 20-sheets of 80-g/m^2 (20-lb) media. • The large-capacity replacement staple cassette holds 1,500 staples.
Networking	• TCP/IP • LPD • 9100
Printer driver features	The PCL 6 printer language provides fast printing performance, built-in intellifont and TrueType scaling technologies, and advanced imaging capabilities.
Automatic language-switching	The all-in-one automatically determines and switches to the appropriate printer language (such as PS or PCL 6) for the print job.
Interface connections	• Hi-Speed USB 2.0 port • 10/100 ethernet (RJ45) network port
Environmental features	• PowerSave mode • ENERGY STAR® qualified
Economical printing	• N-up printing (printing more than one page on a sheet) • Two-sided printing using the automatic duplexer
Supplies	• A supplies status page with a print cartridge gauge that shows the supply levels that remain (HP supplies only) • No-shake print cartridge design

Download Free Service Manual and Resetter Printer at http://printer1.blogspot.com

Table 1-3 HP LaserJet 3090/3092 all-in-one features (continued)

Feature	Description
	• Authentication for HP print cartridges • Enabled supplies-ordering capability
Accessibility	• The online user guide is compatible with text screen-readers. • Print cartridges can be installed and removed by using one hand. • All doors and covers can be opened by using one hand.

Download Free Service Manual and Resetter Printer at http://printer1.blogspot.com

Walkaround

HP LaserJet 3390/3392 all-in-one

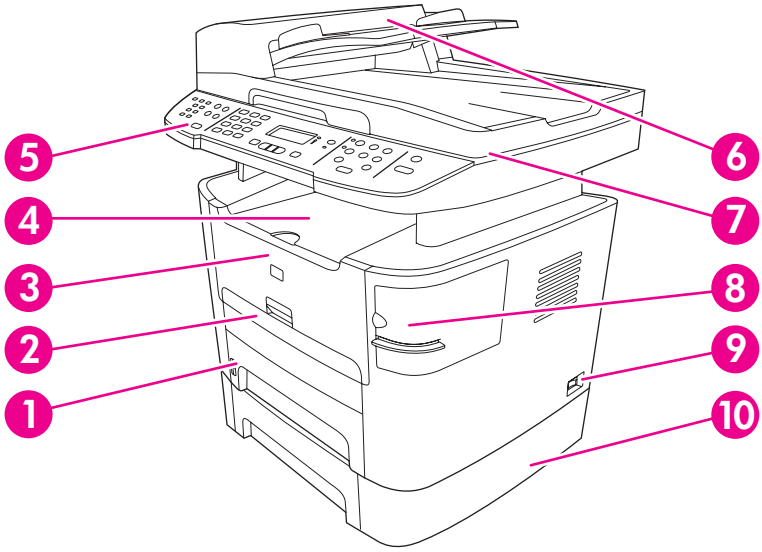

Figure 1-2 Front view

1	Tray 2
2	Priority input slot (tray 1)
3	Print-cartridge door
4	Top (face-down) output bin
5	Control panel
6	Automatic document feeder (ADF)
7	Flatbed scanner glass (under the scanner cover)
8	Convenience stapler (HP LaserJet 3392 all-in-one only)
9	Power switch
10	Optional tray 3 (standard on the HP LaserJet 3392 all-in-one)

Download Free Service Manual and Resetter Printer at http://printer1.blogspot.com

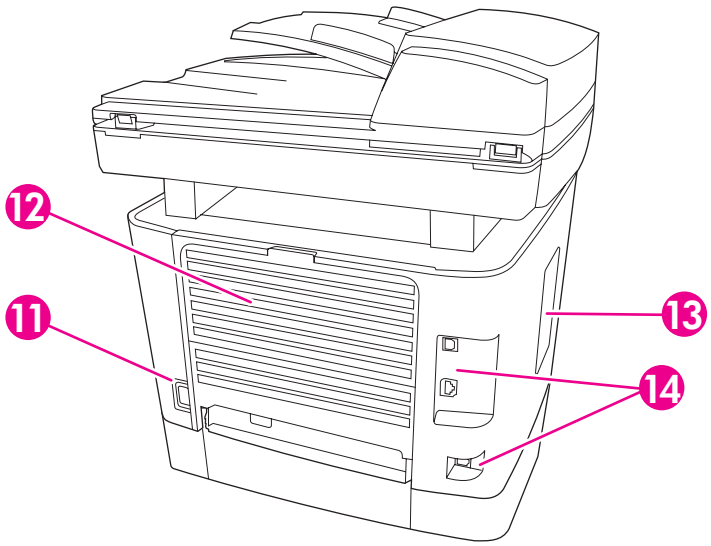

Figure 1-3 Back view

11	Power connector
12	Rear (face-up) output bin door (used for straight-through output path)
13	DIMM door
14	Interface ports

Download Free Service Manual and Resetter Printer at http://printer1.blogspot.com

Interface ports

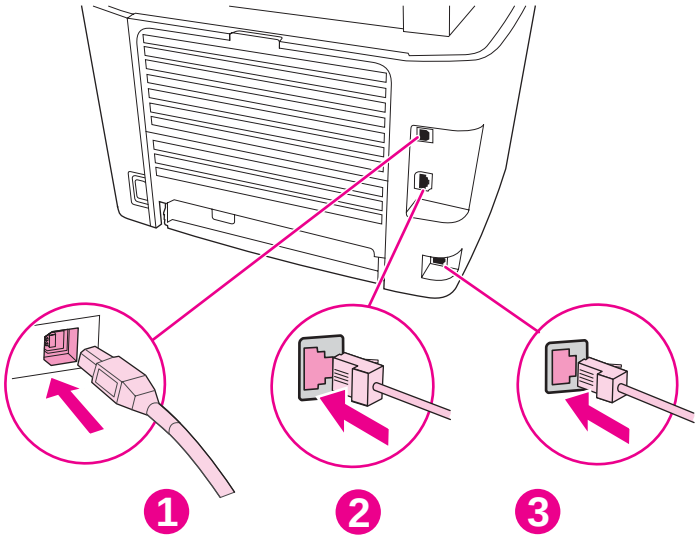

Figure 1-4 Interface ports

1	Hi-Speed USB 2.0 port
2	Network port
3	Fax port

Control panel

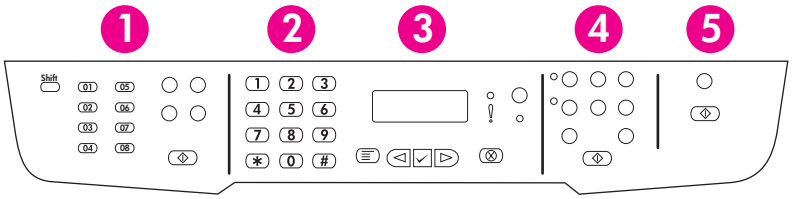

Figure 1-5 Control panel

1	**Fax controls**. Use the fax controls to change commonly used fax settings.
2	**Alphanumeric buttons**. Use the alphanumeric buttons to type data into the all-in-one control-panel display and dial telephone numbers for faxing.
3	**Menu and cancel** controls. Use these controls to select menu options, determine the all-in-one status, and cancel the current print job.
4	**Copy controls**. Use these controls to change commonly used default settings and to start copying.
5	**Scan controls**. Use these controls to scan to e-mail or to a folder.

Download Free Service Manual and Resetter Printer at http://printer1.blogspot.com

Model and serial numbers

An identification label is located on the inside of the print-cartridge door of the all-in-one. This label contains the model and serial numbers. The serial number shows information about the country/region of origin, revision level, production code, and production number of the all-in-one. The label also contains power-rating and regulatory information.

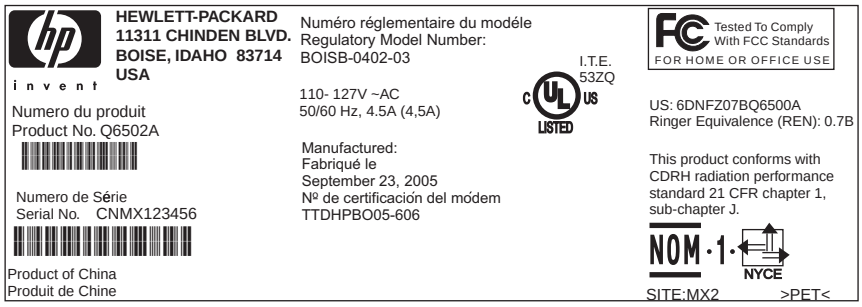

Figure 1-6 HP LaserJet 3090/3092 all-in-one identification label

Download Free Service Manual and Resetter Printer at http://printer1.blogspot.com

Software description

Supported drivers

The following printer drivers are provided. If the printer driver you want is not on the all-in-one CD or is not available on www.hp.com, contact the manufacturer or distributor of the program that you are using, and request a driver for the all-in-one.

NOTE The most recent drivers are available at www.hp.com. depending on the configuration of Windows-based computers, the installation program for the all-in-one software automatically checks the computer for Internet access to obtain the latest drivers.

Table 1-4 Supported printer drivers

Operating system[1]	Fax driver	PCL 6 printer driver	PCL 5 printer driver	PS printer driver	PPD[2] printer driver
Microsoft® Windows® 98		X	X	X	
Microsoft Millennium (Me)		X	X	X	
Windows 2000	X	X	X	X	
Windows XP	X	X	X	X	
Windows Server 2003		X	X	X	
Mac OS X V10.3 and Mac OS X V10.4	X			X	X

1 Not all all-in-one features are available from all drivers or operating systems. See the context-sensitive help in the printer driver for available features.

2 A Macintosh printer driver and the necessary PostScript® (PS) Printer Description Files (PPDs) are included with the all-in-one.

Additional drivers

The following drivers are not included on the CD, but are available from the Internet.

- UNIX® Model Scripts
- Linux drivers
- Windows XP 64-bit drivers

You can obtain Model Scripts for UNIX and Linux by downloading them from the Internet or by requesting them from an HP-authorized service or support provider. For Linux support see www.hp.com/linux. For UNIX support see www.hp.com/gp/jetdirectunix_software.

Download Free Service Manual and Resetter Printer at http://printer1.blogspot.com

Software for Windows

When you install the software for Windows, you can directly connect the all-in-one to a computer by using a USB cable, or you can connect the all-in-one to a network by using the internal print server. See the getting started guide for installation instructions, and see the Readme file for the latest software information.

Windows software components

HP ToolboxFX

You must perform a typical installation to use HP ToolboxFX.

HP ToolboxFX provides links to all-in-one status information and help information, such as the user guide, and tools for troubleshooting all-in-one problems.

Embedded Web server (EWS)

The EWS is a Web-based interface that provides simple access to all-in-one status and configurations, including network configurations and Smart Printing Supplies (SPS) functionality.

You can gain access to the EWS through the network connection to the all-in-one. Type the all-in-one IP address in a Web browser to open the all-in-one EWS home page in the browser. From the home page, you can use the tabs and left navigation menu to check the status of the all-in-one, configure the all-in-one, or check the status of the supplies.

The following are supported browsers:

- Internet Explorer 5.0 or later
- Netscape Navigator 4.75 or later
- Opera 6.05 or later
- Safari 1.2 or later

Download Free Service Manual and Resetter Printer at http://printer1.blogspot.com

Software for Macintosh

For Mac OS X V10.3 and later, use Print Center to print.

NOTE For Macintosh computers, HP ToolboxFX is not supported.

Macintosh software components

HP Director

HP Director is a software program for working with documents. When the document is loaded into the ADF and the computer is connected directly to the all-in-one, HP Director appears on the computer screen to initiate faxing, scanning, or changing settings on the all-in-one through Macintosh Configure Device.

Also included is the HP all-in-one Setup Assistant, which sets up the fax and print queues.

Macintosh Configure Device (Mac OS X V10.3 and Mac OS X V10.4)

Macintosh Configure Device is a Web-based program that provides access to information about the all-in-one (or example, information about supplies status and all-in-one settings). Use Macintosh Configure Device to monitor and manage the all-in-one from the computer.

NOTE You must perform a complete software installation to use Macintosh Configure Device.

- Check the all-in-one status and print information pages.
- Check and change all-in-one settings.
- Check default print settings.
- Check and change fax settings, including IP configuration, Advanced, mDNS, SNMP, network configuration, and fax reports.

You can view Macintosh Configure Device when the all-in-one is directly connected to a computer or when it is connected to the network.

NOTE You do not have to have Internet access to open and use Macintosh Configure Device.

To view Macintosh Configure Device when the all-in-one is connected to the computer

1. Open HP Director by clicking the **HP Director** icon in the dock.
2. In HP Director, click **Settings**.
3. Select **Configure Device** to open the Macintosh Configure Device home page in a browser.

To view Macintosh Configure Device when the all-in-one is connected to the network

1. Open one of the following browsers:
   - Internet Explorer 5.0 or later
   - Netscape Navigator 4.75 or later

Download Free Service Manual and Resetter Printer at http://printer1.blogspot.com

- Opera 6.05 or later
- Safari 1.2 or later

2. Type the IP address of the all-in-one into the Web browser to open the Macintosh Configure Device home page.

PDEs (Mac OS X V10.3 and Mac OS X V10.4)

PDEs are code plug-ins that provide access to all-in-one features, such as information about the number of copies, two-sided printing, and quality settings. An installation program for the PDEs and other software is provided on the HP LaserJet 3390/3392 all-in-one CD for Macintosh.

Download Free Service Manual and Resetter Printer at http://printer1.blogspot.com

Uninstalling software

Windows

Use the **Add or Remove Programs** method in Windows to remove the all-in-one software. This method does *not* require you to have the software CD.

1. Click **Start**, point to **Settings**, and then click **Control Panel**.

   NOTE In Windows XP, click **Start**, and then click **Control panel**.

2. Double-click **Add or Remove Programs**.
3. Scroll through the list of software programs and click **HP LaserJet 3390/3392 all-in-one**.
4. Click **Remove**.

Macintosh

To remove the software, drag the PPD files to the trash can.

Download Free Service Manual and Resetter Printer at http://printer1.blogspot.com

Media specifications

Supported media weights and sizes

NOTE See the user guide for information about using media correctly.

For optimum results, use conventional 80 to 90 g/m^2 (20 to 24 lb) photocopy paper. Verify that the paper is of good quality and is free of cuts, nicks, tears, spots, loose particles, dust, wrinkles, curls, and bent edges.

NOTE The all-in-one supports a wide range of standard and custom size print media. The capacity of trays and bins can vary depending on media weight and thickness and on environmental conditions. use only transparencies that are designed for use with HP LaserJet printers. Inkjet and monochrome transparencies are not supported for this all-in-one.

Table 1-5 Priority input slot (tray 1) media specifications

Media	Dimensions[1]	Weight	Capacity
Paper	Minimum 76 x 127 mm (3 x 5 inches) Maximum 218 x 356 mm (8.5 x 14 inches)	60 to 177 gm^2 (16 to 47 lb)	1 sheet
HP cover paper[2]	Same as the preceding listed minimum and maximum sizes.	203 g/m^2 (75 lb cover)	1 sheet
Transparencies and opaque film		Thickness: 0.10 to 0.13 mm (3.9 to 5.1 mils)	1 sheet
Labels[3]		Thickness: up to 0.23 mm (9 mils)	1 sheet
Envelopes		Up to 90 gm^2 (16 to 24 lb)	1 sheet

1 The all-in-one supports a wide range of standard and custom sizes of media. Check the printer driver for supported sizes.
2 Hewlett-Packard does not guarantee results when printing with other types of heavy paper.
3 Smoothness: 100 to 250 (Sheffield).

Table 1-6 Tray 2 and optional tray 3

Media	Dimensions[1]	Weight	Capacity[2]
Minimum-size	148 x 147.3 mm (4.1 x 5.8 inches)	60 to 105 gm^2 (16 to 28 lb)	250 sheets of 80 gm^2 or 20 lb paper
Maximum-size	216 x 356 mm (8.5 x 14 inches)		
Letter	216 x 279 mm (8.5 x 11 inches)		
A4	210 x 297 mm (8.3 x 11.7 inches)		

Download Free Service Manual and Resetter Printer at http://printer1.blogspot.com

Table 1-6 Tray 2 and optional tray 3 (continued)

Media	Dimensions[1]	Weight	Capacity[2]
Legal	216 x 356 mm (8.5 x 14 inches)		
16K (195 x 270 mm)	195 x 270 mm (7.7 x 10.6 inches)		
16K (7.75 x 10.75 inches)	197 x 273 mm (7.8 x 10.7 inches)		
16K 184 x 260 mm	184 x 260 mm (7.2 x 10.2 inches)		
A5	148 x 210 mm (5.8 x 8.3 inches)		
B5 (ISO	176 x 250 mm (6.9 x 9.9 inches)		
B5 (JIS)	182 x 257 mm (7.2 x 10 inches)		
Executive	191 x 267 mm (7.3 x 10.5 inches)		

1 The all-in-one supports a wide range of standard and custom sizes of media. Check the printer driver for supported sizes.
2 Capacity can vary depending on media weight and thickness, and environmental conditions.

Table 1-7 ADF

Media	Dimensions[1]	Weight	Capacity[2]
Minimum-size	127 x 127 mm (5 x 5 inches)	60 to 90 gm^2 (16 to 24 lb)	50 sheets
Maximum-size	216 x 381 mm (8.5 x 15 inches)		

NOTE When faxing, copying, or scanning using the all-in-one, use the flatbed scanner if the original is fragile, thin, thick, too small for the ADF, or a photograph. Also use the flatbed scanner for the fit-to-page copying feature. The flatbed scanner provides the best fax, copy, and scan resolution.

Media to avoid

The all-in-one can handle many types of media. Using media that is outside the specifications degrades print quality and increases the chance of jams occurring.

- Do not use media that is too rough.
- Do not use media that contains cutouts or perforations other than standard 3-hole punched paper.
- Do not use multipart forms.
- Do not use paper that contains a watermark if you are printing solid patterns.

Download Free Service Manual and Resetter Printer at http://printer1.blogspot.com

Media that can damage the all-in-one

In rare circumstances media can damage the all-in-one. Avoid the following types of media to prevent possible damage:

- Do not use media with staples attached.
- Do not use transparencies designed for inkjet printers or other low-temperature printers. Use only transparencies that are specified for use with HP LaserJet printers.
- Do not use photo paper intended for inkjet printers.
- Do not use paper that is embossed or coated and is not designed for the temperature of the image-fuser. Select media that can tolerate temperatures of 200°C (392°F) for 0.1 second.
  HP manufactures a media that is designed for the all-in-one.
- Do not use letterhead paper that was produced with low-temperature dyes or thermography. Preprinted forms or letterhead must use inks that can tolerate temperatures of 200°C (392°F) for 0.1 second.
- Do not use any media that produces emissions, or that melts, offsets, or discolors when exposed to 200°C (392°F) for 0.1 second.

To order HP LaserJet printing supplies, go to www.hp.com/go/ljsupplies in the U.S. or to www.hp.com/ghp/buyonline.html/ worldwide.

Download Free Service Manual and Resetter Printer at http://printer1.blogspot.com

2 Installation

- Operating environment
- Unpacking
- Installing input devices
- Installing the control-panel faceplate
- Loading media
- Installing accessories

Download Free Service Manual and Resetter Printer at http://printer1.blogspot.com

Operating environment

Place the all-in-one on a sturdy, level surface in a well-ventilated area. Make sure that the air vents are not blocked and that the all-in-one is installed away from direct sunlight, open flames, and ammonia fumes.

Store or install the all-in-one in an area that meets the following requirements:

- Temperature (printer; operating) 15 to 32.5ºC (59 to 90.5ºF)
- Temperature (printer; storage) -20 to 60ºC (-4 to 140ºF)
- Humidity (printer; operating) 10 to 80% relative humidity (no condensation)
- Humidity (printer; storage) 10 to 90% relative humidity (no condensation)
- Temperature (toner cartridge; storage) -20 to 40º C (-4 to 104º F)
- Humidity (toner cartridge; storage) 10 to 90% relative humidity (no condensation)

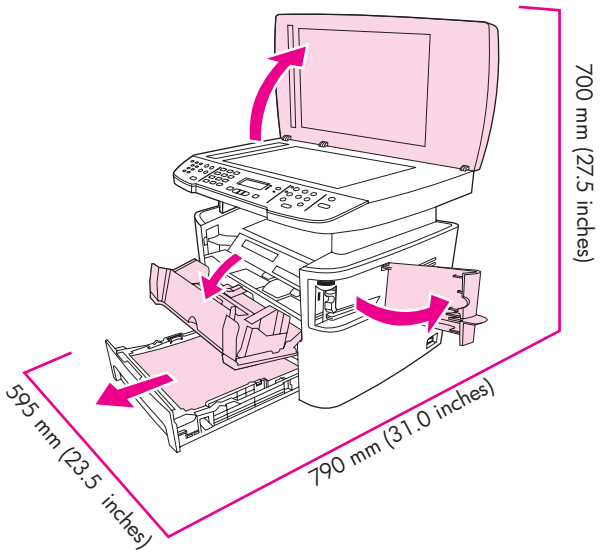

Figure 2-1 Operating environment

Download Free Service Manual and Resetter Printer at http://printer1.blogspot.com

Minimum system requirements

- Windows® 2000
- Windows XP
- Windows Millennium (Me)
- Windows Server 2000
- Windows 98
- Mac OS X V10.3 and later
- 128 MB RAM for Windows operating systems
- 32 MB RAM for Macintosh operating systems
- 250 MB hard disk space (full installation)
- CD-ROM drive
- USB port

Download Free Service Manual and Resetter Printer at http://printer1.blogspot.com

Unpacking

The following components are included in the box.

NOTE The USB and network cables are not included.

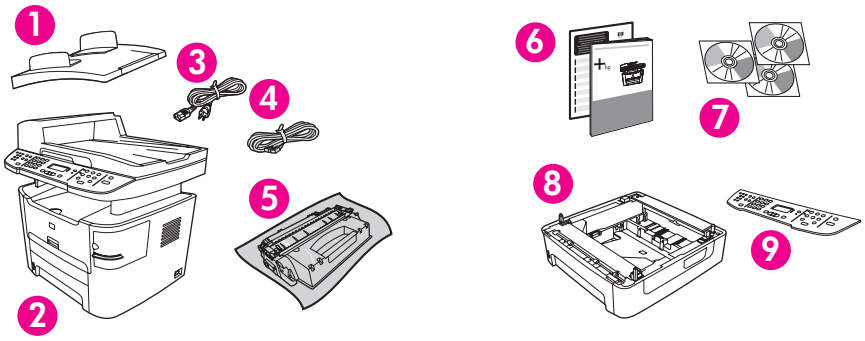

Figure 2-2 HP LaserJet 3390/3392 all-in-one package contents

Item	Description
1	Automatic document feeder (ADF) input tray
2	HP LaserJet 3390/3392 all-in-one
3	Power cord
4	Fax cord
5	Print cartridge
6	Start guide and support flyer
7	CD-ROMs (software and online user guide)
8	250-sheet media input tray (HP LaserJet 3392 all-in-one only)
9	Control-panel faceplate (if not already installed)

Installing the supplies (for example, the print cartridge), is similar to replacing them. See Managing supplies on page 34 for more information about installing supplies.

Download Free Service Manual and Resetter Printer at http://printer1.blogspot.com

Installing input devices

ADF input tray

1. Open the ADF cover.
2. Align the two tabs on the input tray with the grooves in the ADF.
3. Slide the tray into the grooves until the tray snaps into place.
4. Close the ADF cover.

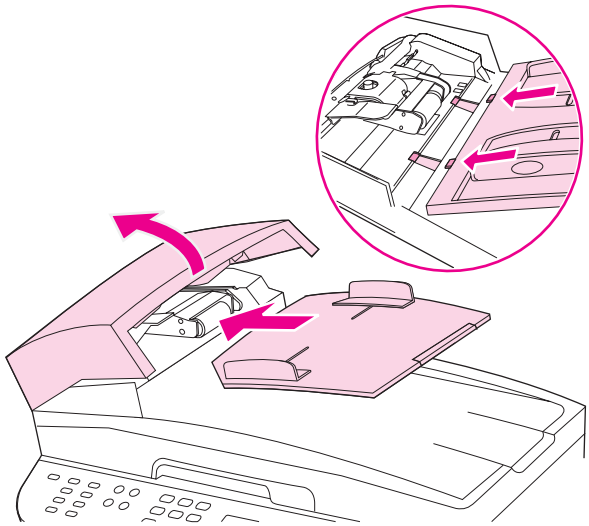

Figure 2-3 Install the ADF input tray

250-sheet input tray (tray 3)

CAUTION Always install the 250-sheet tray (tray 3) in the location where the all-in-one will remain. The assembled combination is heavy, and cannot be easily moved.

1. Place the 250-sheet feeder (tray 3) on a sturdy, level surface.
2. Use the alignment pins at the corners of the tray as a guide, and place the all-in-one on top of the tray.

Download Free Service Manual and Resetter Printer at http://printer1.blogspot.com

3. Make sure that the right-rear connector (callout 1) connects with the all-in-one.

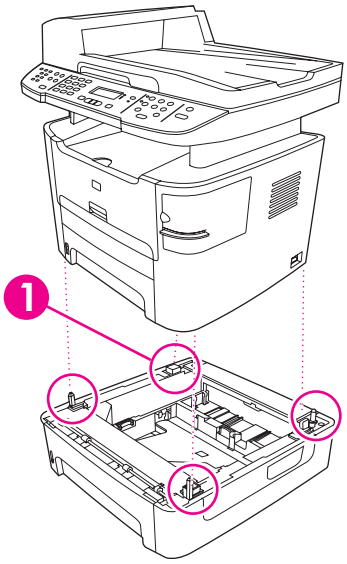

Figure 2-4 Install the 250-sheet input tray

Download Free Service Manual and Resetter Printer at http://printer1.blogspot.com

Installing the control-panel faceplate

NOTE The control-panel faceplate might already be installed.

1. Lift the scanner cover.
2. Align the control-panel faceplate with the all-in-one.
3. Beginning in the center of the faceplate and working outward, press the faceplate until it snaps into place.

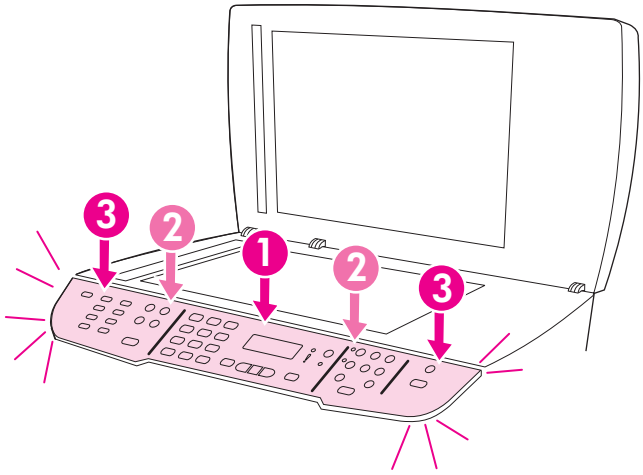

Figure 2-5 Install the control-panel faceplate

Download Free Service Manual and Resetter Printer at http://printer1.blogspot.com

Loading media

Loading documents onto the flatbed scanner or into the ADF

NOTE For the best-quality scans, use the flatbed scanner.

To load originals onto the flatbed scanner

1. Make sure that the automatic document feeder (ADF) contains no media.
2. Lift the scanner cover.
3. Place the original document face-down on the flatbed scanner glass with the upper-left corner of the document at the lower-right corner of the glass.

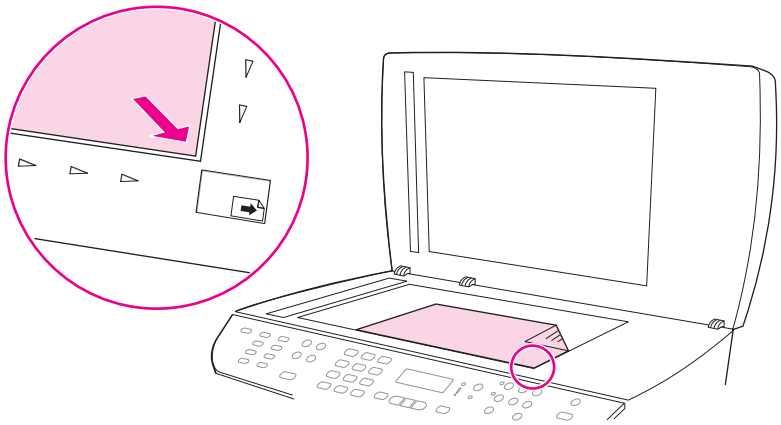

Figure 2-6 Load a document onto the flatbed scanner

4. Gently close the scanner cover.

   The document is ready to be faxed/copied/scanned.

Download Free Service Manual and Resetter Printer at http://printer1.blogspot.com

To load originals into the ADF

NOTE The ADF capacity for the HP LaserJet 3390/3392 all-in-one is up to 50 sheets of 80 g/m^2 or 20 lb media.

1. Insert the stack of originals into the ADF input tray top-edge-first, with the media stack face-up and the first page to be copied on the top of the stack. Slide the stack into the ADF until it does not move any farther.

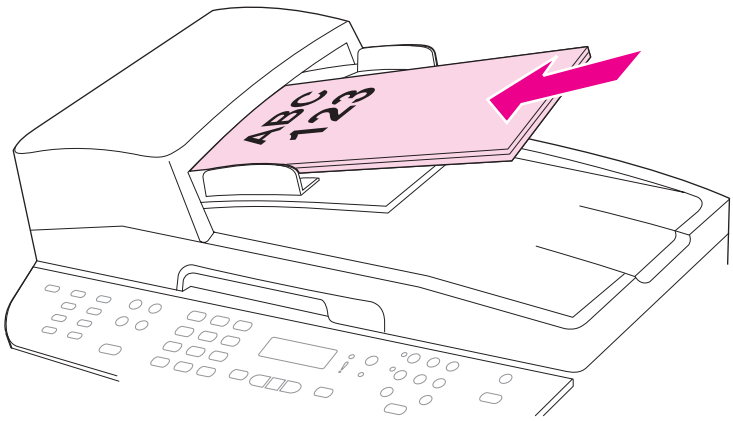

Figure 2-7 Load documents into the ADF (1 of 2)

2. Adjust the media guides until they are snug against the stack.

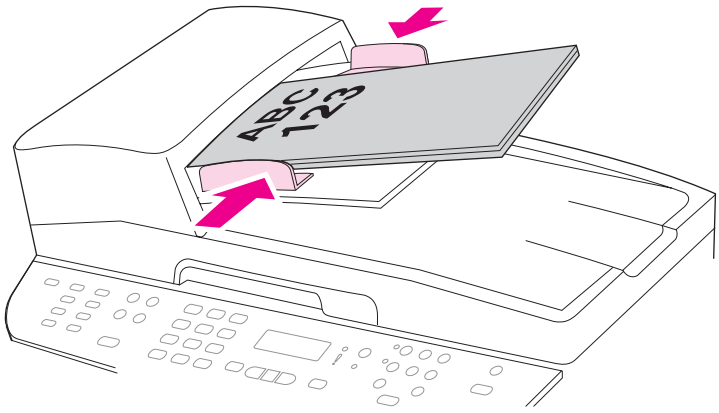

Figure 2-8 Load documents into the ADF (2 of 2)

3. The document is ready to be faxed, copied, or scanned.

Download Free Service Manual and Resetter Printer at http://printer1.blogspot.com

Loading the single-sheet priority input slot (tray 1)

NOTE The single-sheet priority input slot on the HP LaserJet 3390/3392 all-in-one holds one sheet of media up to 163 g/m^2 (43 lb) in weight or one envelope, transparency, or card. To prevent jams and skewing, always adjust the side media guides before feeding the media.

Load the media with the top forward and the side to be printed on facing up.

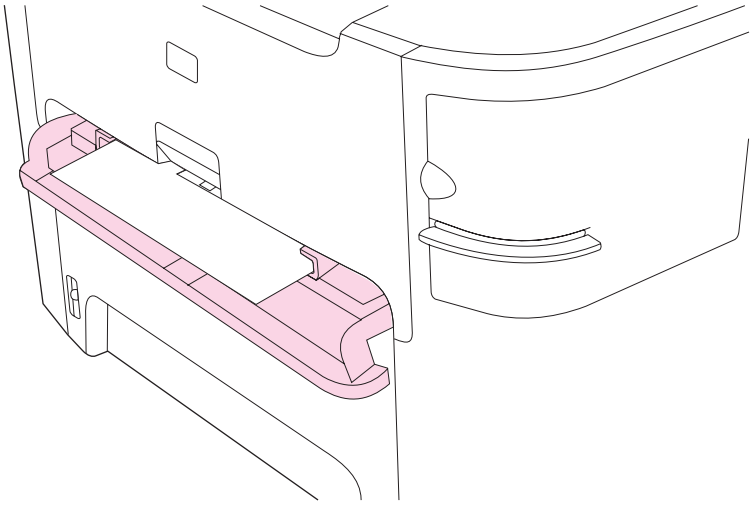

Figure 2-9 Load the single-sheet priority input slot (tray 1)

Loading tray 2 or optional tray 3

1. Pull out tray 2 or tray 3.

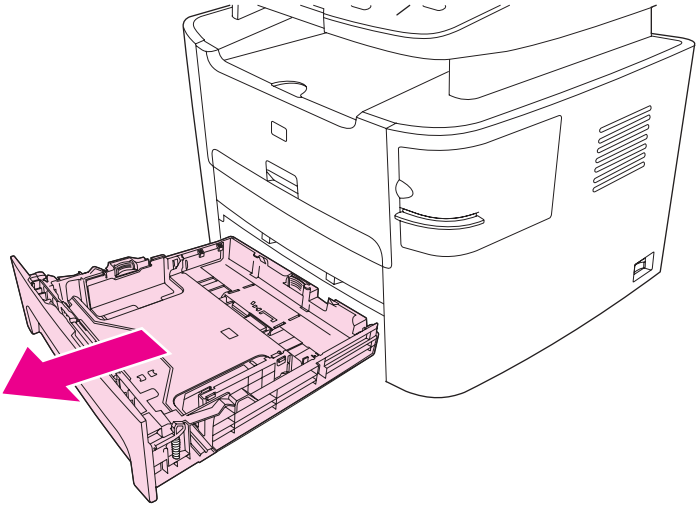

Figure 2-10 Loading tray 2 or tray 3 (1 of 3)

2. Adjust the media guides to the size of the media.

Download Free Service Manual and Resetter Printer at http://printer1.blogspot.com

3. Place the media in the tray.

NOTE Do not fan the media before placing it in the tray.

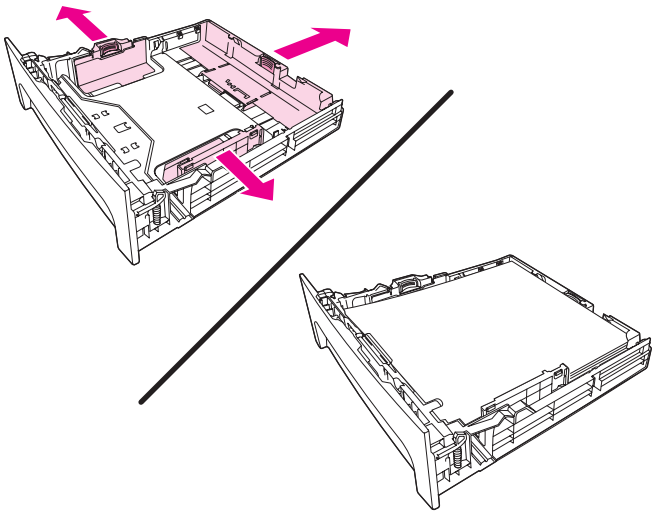

Figure 2-11 Load tray 2 or tray 3 (2 of 3)

4. Slide tray 2 or tray 3 into the all-in-one.

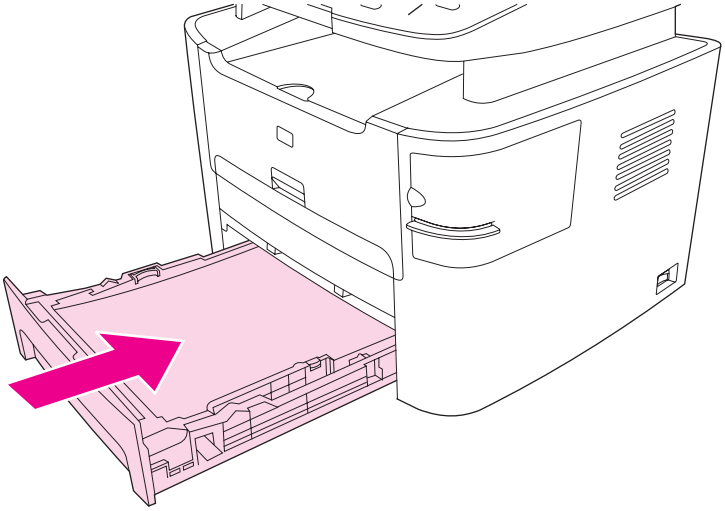

Figure 2-12 Load tray 2 or tray 3 (3 of 3)

Download Free Service Manual and Resetter Printer at http://printer1.blogspot.com

Installing accessories

Removing and replacing a DIMM

1. Open the DIMM door.

NOTE The DIMM door is not hinged. Open the DIMM door and set it next to the all-in-one.

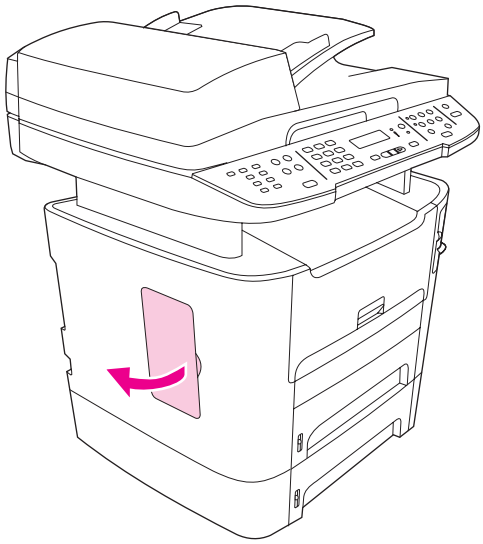

Figure 2-13 Removing and replacing a DIMM (1 of 4)

2. Release the locks on each side of the DIMM and pull the DIMM out of the all-in-one.

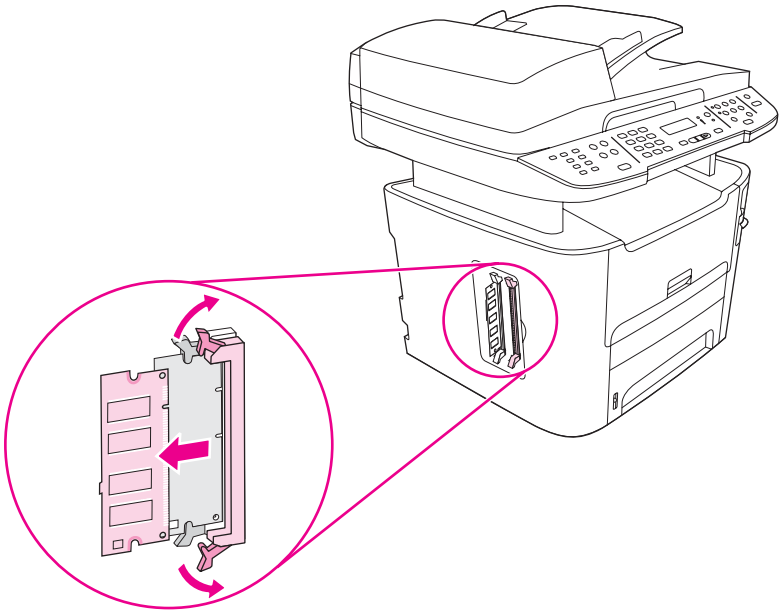

Figure 2-14 Removing and replacing a DIMM (2 of 4)

Download Free Service Manual and Resetter Printer at http://printer1.blogspot.com

3. Install a replacement DIMM. Make sure that the locks on each side of the DIMM are in the locked position

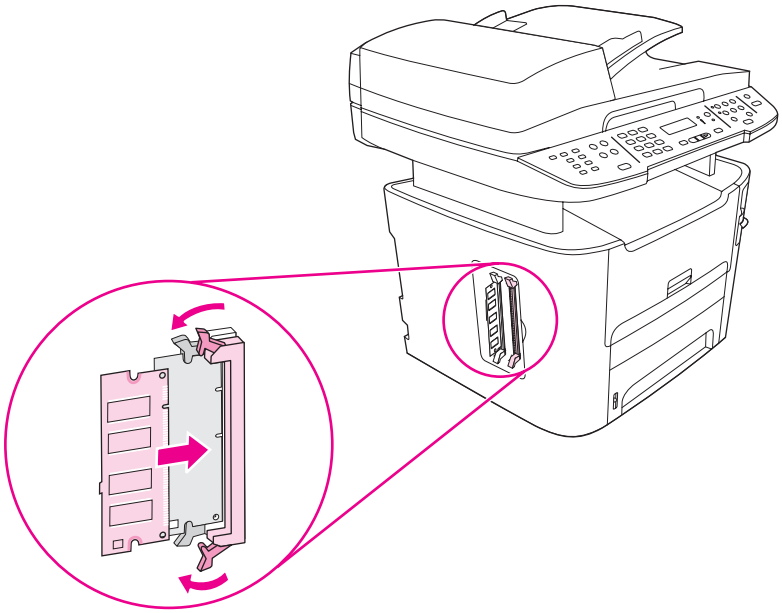

Figure 2-15 Removing and replacing a DIMM (3 of 4)

4. Replace and close the DIMM door.

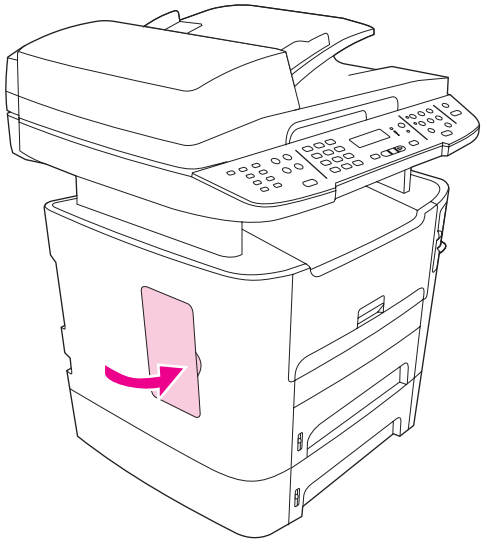

Figure 2-16 Removing and replacing a DIMM (4 of 4)

Download Free Service Manual and Resetter Printer at http://printer1.blogspot.com

Download Free Service Manual and Resetter Printer at http://printer1.blogspot.com

3 Maintenance

- Managing supplies
- Cleaning the all-in-one
- Managing the all-in-one
- Using the HP ToolboxFX
- Using Macintosh Configure Device (Mac OS X V10.3 and Mac OS X V10.4)
- Understanding the Embedded Web server

Download Free Service Manual and Resetter Printer at http://printer1.blogspot.com

Managing supplies

Life expectancies of supplies and the all-in-one

Item	Capacity
HP LaserJet 3390/3392	10,000 pages-per-month 50,000 pages lifetime
Print cartridge	2,500 pages[1] (standard) 6,000 pages[1] (high-capacity)
Staple cassette	1,500 staples

[1] Actual yield depends on use.

Ordering supplies

NOTE To locate part numbers for supplies, see Accessories and ordering information on page 253.

Ordering supplies

To order supplies, go to one of the following Web sites.

- North America: www.hp.com/go/orders/supplies-na
- Europe and Middle East: www.hp.com/go/orders/supplies-emea
- Asia Pacific countries/regions: www.hp.com/go/orders/supplies-ap
- Latin America: www.hp.com/go/orders/supplies-la

Storing supplies

Follow these guidelines for storing supplies:

- Do not remove the print cartridge from its package until you are ready to use it.

  CAUTION To prevent damage, do not expose the print cartridge to light for more than a few minutes.

- Make sure that you store supplies in accordance with the environmental operating and storage specifications in this manual. See Environmental specifications on page 322.
- Store the supply in a horizontal position.
- Store the supply in a dark, dry location away from heat and magnetic sources.

Download Free Service Manual and Resetter Printer at http://printer1.blogspot.com

Replacing and recycling supplies

Visit www.hp.com/go/environment or www.hp.com/hpinf/community/environment/productinfo/saftey for information about the following environmental topics:

- Product environmental profile sheet for this and many related HP products
- Hewlett Packard's commitment to the environment
- Hewlett-Packard's environmental management system
- Hewlett Packard's end-of-life product return and recycling program
- Material safety data sheets (MSDS), which are also available at: www.hp.com/go/msds, contain information about supplies that contain chemical substances; such as toner.

It's easy to return and recycle your empty HP LaserJet print cartridges—free of charge—with HP Planet Partners. HP is committed to providing inventive, high-quality products and services that are environmentally sound, from product design and manufacturing to distribution, operation, and recycling processes. We ensure that returned HP LaserJet print cartridges are recycled properly, processing them to recover valuable plastics and metals for new products and diverting millions of tons of waste from landfills. Because this cartridge is being recycled and used in new materials, it will not be returned to you. Empty HP LaserJet print cartridges are recycled responsibly when you participate in the HP Planet Partners program. Thank you for being environmentally responsible!

In many countries/regions, this product's printing supplies (for example, the print cartridge, drum) can be returned to HP through the HP Printing Supplies Returns and Recycling Program. An easy-to-use and free take back program is available in more than 35 countries/regions. Multi-lingual program information and instructions are included in every new HP LaserJet print cartridge and supplies package.

HP Printing Supplies Returns and Recycling Program Information

Since 1992, HP has offered HP LaserJet supplies return and recycling free of charge. In 2004, HP Planet Partners for LaserJet Supplies was available in 85% of the world market where HP LaserJet supplies are sold. Postage-paid and pre-addressed labels are included within the instruction guide in most HP LaserJet print cartridge boxes. Labels and bulk boxes are also available through the Web site www.hp.com/go/recycle.

Use the label to return empty, original HP LaserJet print cartridges only. Please do not use this label for non-HP cartridges, refilled or remanufactured cartridges, or warranty returns. Printing supplies or other objects that are inadvertently sent to the HP Planet Partners program cannot be returned.

More than 10 million HP LaserJet print cartridges were recycled globally in 2004 through the HP Planet Partners supplies recycling program. This record number represents 26 million pounds of print cartridge materials diverted from landfills. Worldwide, in 2004, HP recycled an average of 59% of the print cartridge by weight consisting primarily of plastic and metals. Plastics and metals are used to make new products such as HP products, plastic trays and spools. The remaining materials are disposed of in an environmentally responsible manner.

U.S. returns

For a more environmentally responsible return of used cartridges and supplies, HP encourages the use of bulk returns. Simply bundle two or more cartridges together and use the single, pre-paid, pre-addressed UPS label that is supplied in the package. For more information in the U.S., call 1–800–340-2445 or visit the HP Web site at www.hp.com/go/recycle.

Non-U.S. returns

Download Free Service Manual and Resetter Printer at http://printer1.blogspot.com

Non-U.S. customers should visit the www.hp.com/go/recycle Web site for further information regarding availability of the HP Printing Supplies Returns and Recycling Program.

Paper

This all-in-one is capable of using recycled papers, when the paper meets the guidelines outlined in the *HP LaserJet Printer Family Print Media Guide*, which you can view on the Web at www.hp.com/support/ljpaperguide. This product is suitable for the use of recycled paper according to EN12281:2002.

Material restrictions

This HP product contains a battery and contains mercury in the fluorescent lamp or scanner that might require special handling at end-of-life.

Type:	Lithium carbon monofluoride (solid button cell)
Weight:	Approximately. 1 gram
Location:	On formatter PC board (one battery per all-in-one)
User removable:	No

Download Free Service Manual and Resetter Printer at http://printer1.blogspot.com

Replacing the print cartridge

CAUTION If toner gets on your clothing, wipe it off with a dry cloth and wash the clothing in cold water. *Hot water sets toner into the fabric*.

1. Turn off the all-in-one, and open the print-cartridge door.

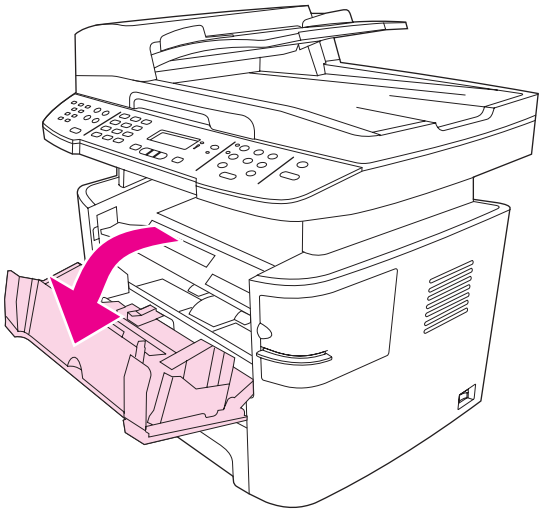

Figure 3-1 Replace the print cartridge (1 of 5)

2. Grasp the handle on the print cartridge and then pull the cartridge straight out to remove it. See the recycling information inside the replacement-print-cartridge box.

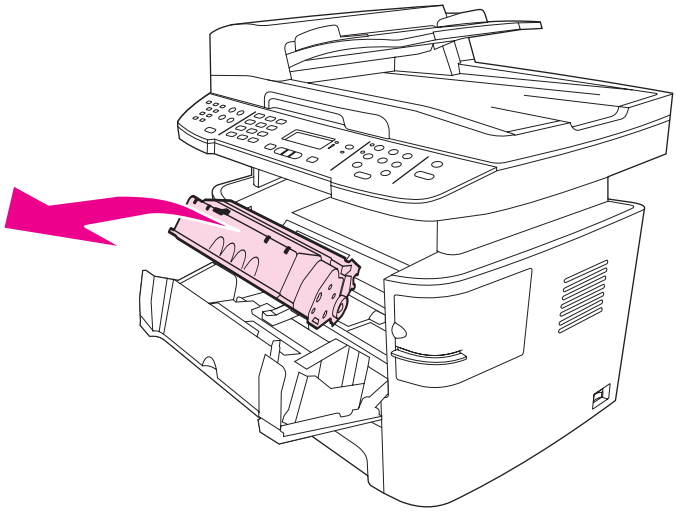

Figure 3-2 Replace the print cartridge (2 of 5)

Download Free Service Manual and Resetter Printer at http://printer1.blogspot.com

3. Remove the replacement print cartridge from its packaging. Bend the plastic tab at the end of the cartridge, and then pull the tab until all of the sealing tape is removed from the cartridge.

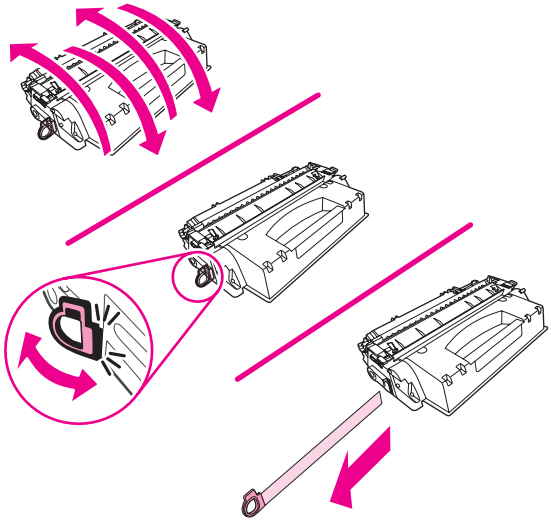

Figure 3-3 Replace the print cartridge (3 of 5)

4. Insert the print cartridge into the all-in-one until it is *firmly* in place.

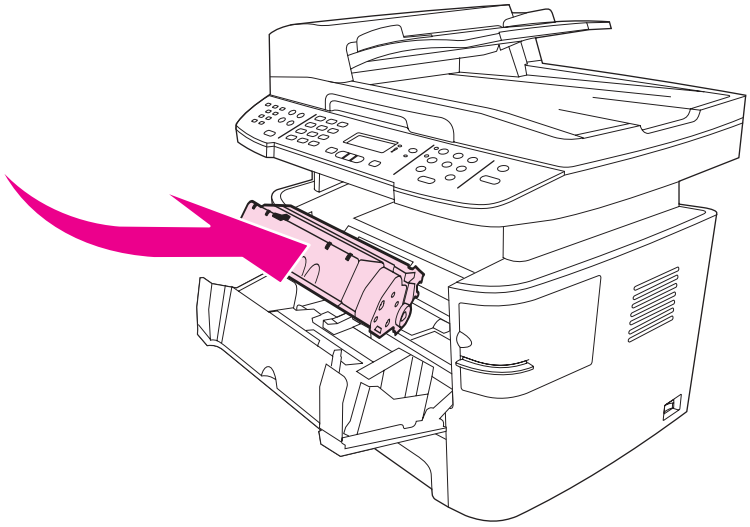

Figure 3-4 Replace the print cartridge (4 of 5)

Download Free Service Manual and Resetter Printer at http://printer1.blogspot.com

5. Close the print-cartridge door, and turn on the all-in-one.

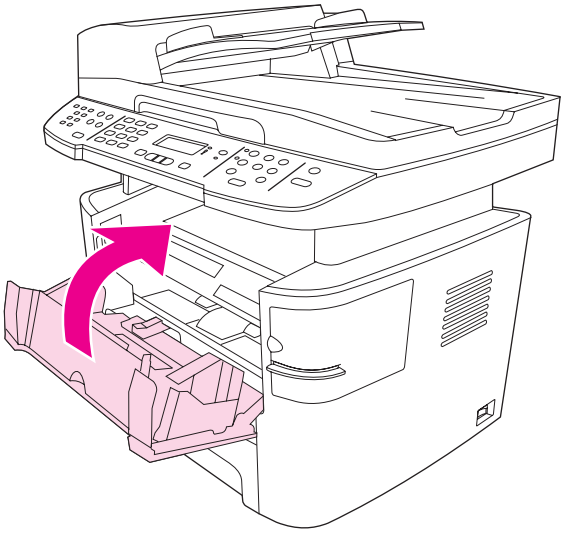

Figure 3-5 Replace the print cartridge (5 of 5)

Download Free Service Manual and Resetter Printer at http://printer1.blogspot.com

Replacing the staple cassette

1. Open the convenience stapler door.

NOTE Opening the convenience-stapler door disables the convenience stapler.

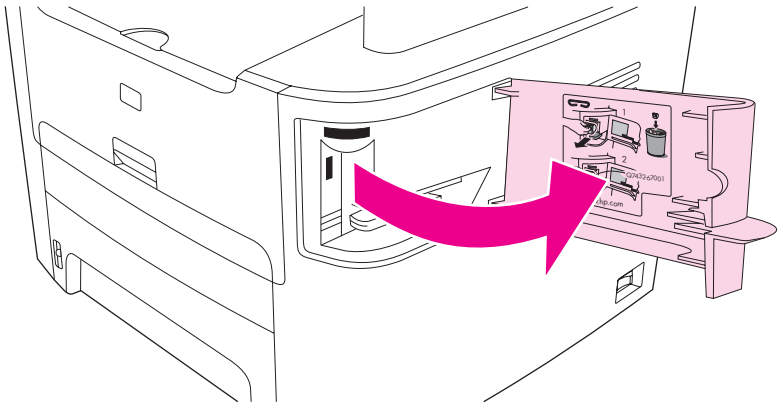

Figure 3-6 Install the staple cassette (1 of 4)

2. Remove the staple cassette from the all-in-one.

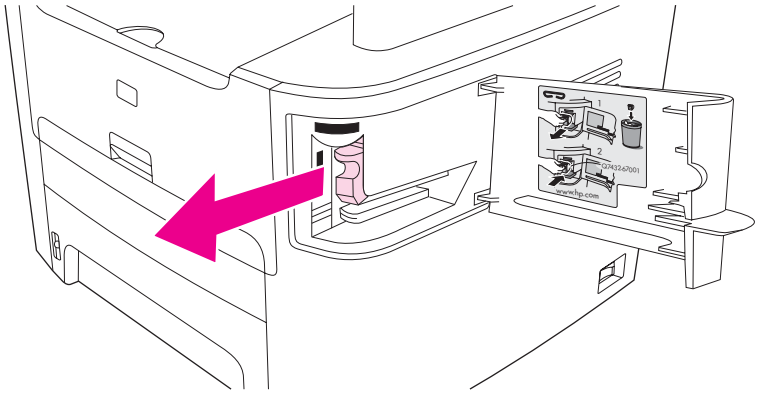

Figure 3-7 Install the staple cassette (2 of 4)

Download Free Service Manual and Resetter Printer at http://printer1.blogspot.com

3. Insert one 1,500-staple cassette into the opening inside the convenience-stapler door.

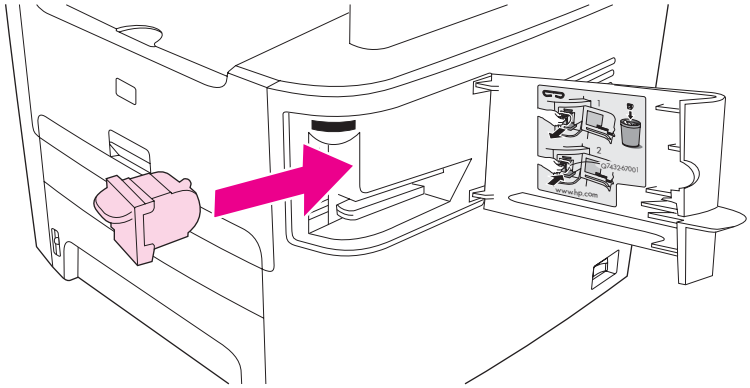

Figure 3-8 Install the staple cassette (3 of 4)

4. Close the convenience-stapler door.

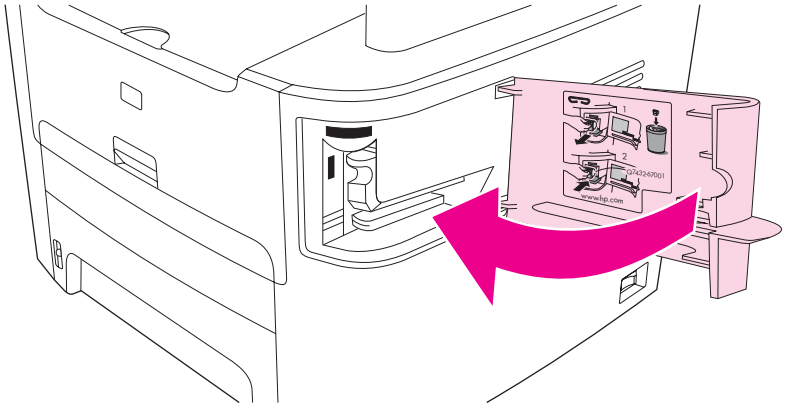

Figure 3-9 Install the staple cassette (4 of 4)

Download Free Service Manual and Resetter Printer at http://printer1.blogspot.com

Replacing the tray 2 pickup roller

CAUTION Failure to correctly complete this procedure might cause damage to the all-in-one.

1. Perform the following tasks before beginning this procedure:
   - Turn off the all-in-one and unplug the power cord from the electrical outlet.
   - Open the print-cartridge door and remove the print cartridge.
   - Remove the tray 2 cassette.
   - Lift the all-in-one off of tray 3, if that tray is installed.
2. Place the all-in-one on its back on the work surface, with the front facing up.

   WARNING! When you move the all-in-one into this position, the scanner cover can open suddenly and be damaged. You *must* support the scanner cover to keep it from opening.

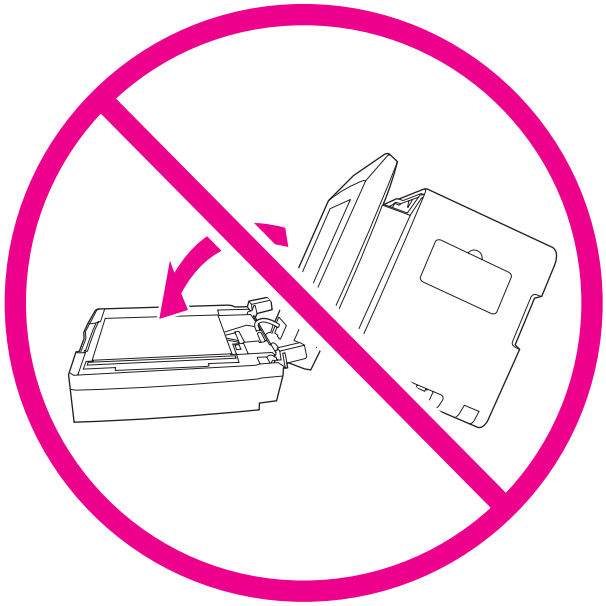

Figure 3-10 Replace the tray 2 pickup roller (1 of 7)

Download Free Service Manual and Resetter Printer at http://printer1.blogspot.com

3. Reach into the area that you exposed when you removed tray 2. Pull the white tabs outward, and rotate the roller-retaining collars up.

Hint Push down on the green tab to release and lower the duplex assembly to expose more of the roller.

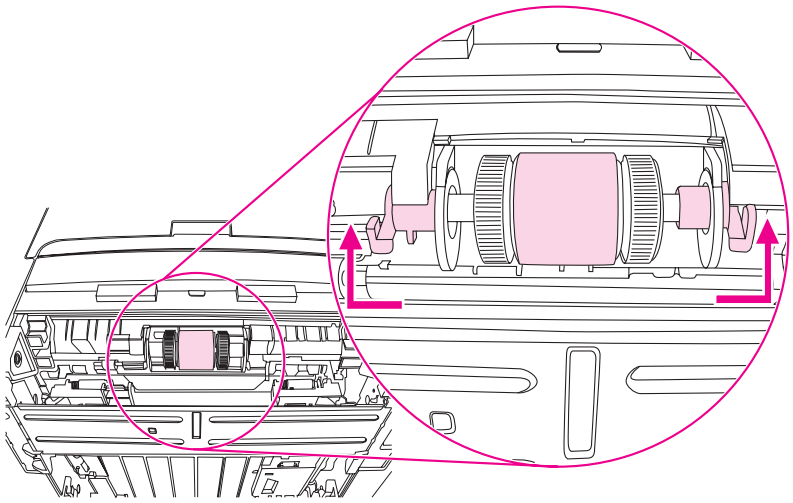

Figure 3-11 Replace the tray 2 pickup roller (2 of 7)

4. With the tab on the collar aligned with the slot in the plastic bracket, slide the collar to the right, and leave the collar in this position for the remainder of this procedure.

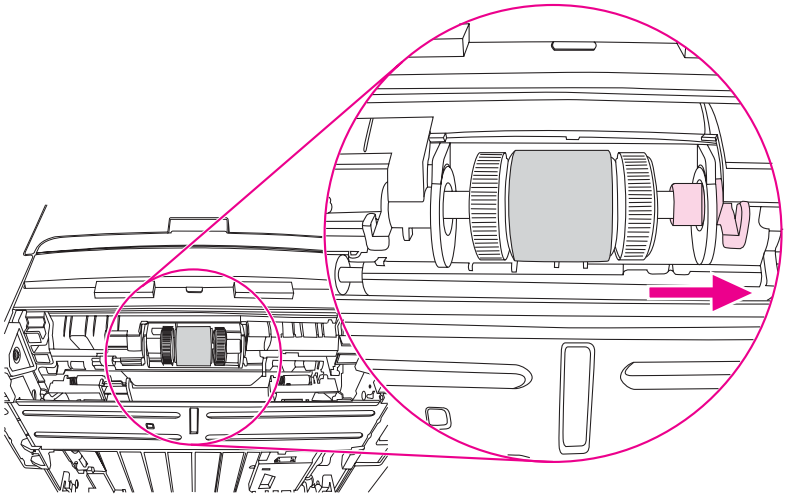

Figure 3-12 Replace the tray 2 pickup roller (3 of 7)

Download Free Service Manual and Resetter Printer at http://printer1.blogspot.com

5. Remove the pickup roller.

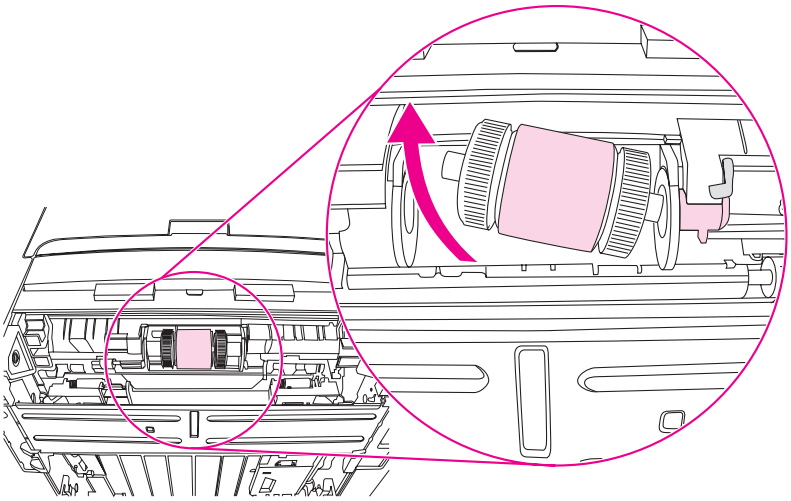

Figure 3-13 Replace the tray 2 pickup roller (4 of 7)

6. Insert the left side of the replacement-pickup-roller shaft into the left slot (callout 1), and insert the right side shaft (the side with the notch) into the right slot (callout 2).

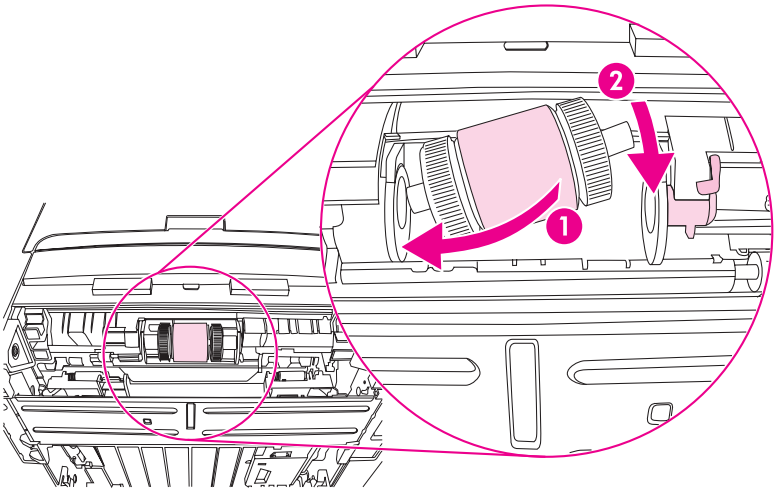

Figure 3-14 Replace the tray 2 pickup roller (5 of 7)

7. Rotate the roller shaft until the notch engages with the drive shaft and clicks into place.

Download Free Service Manual and Resetter Printer at http://printer1.blogspot.com

8. Place the left retaining collar over the end of the roller shaft, align the tab on the collar with the slot in the plastic bracket, and then slide the collar toward the pickup roller.

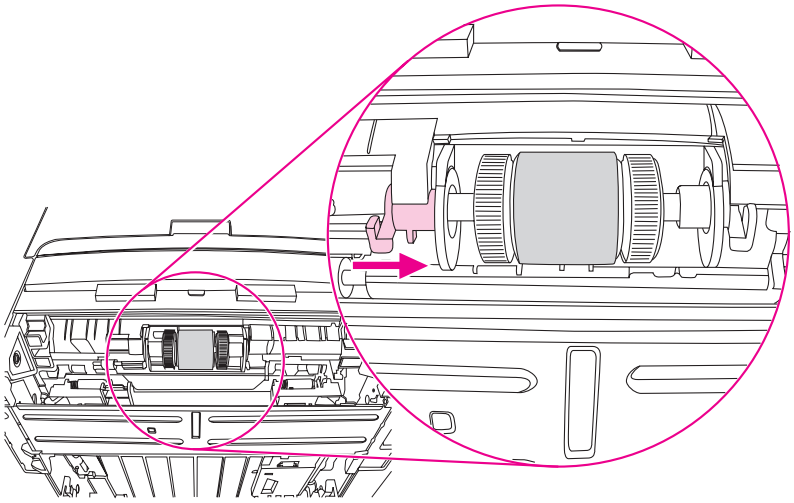

Figure 3-15 Replace the tray 2 pickup roller (6 of 7)

9. With the tab on the right collar aligned with the slot on the plastic bracket, slide the collar towards the pickup roller. Rotate the right and left retaining collars down into the locked position.

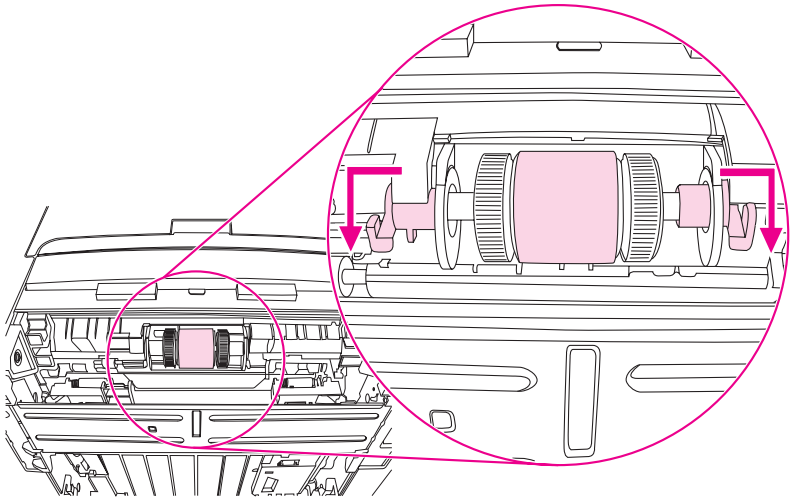

Figure 3-16 Replace the tray 2 pickup roller (7 of 7)

10. Push up on the duplex assembly until it locks into place. Place the all-in-one upright on the work surface with the top of the all-in-one facing up.

Download Free Service Manual and Resetter Printer at http://printer1.blogspot.com

WARNING! When you move the all-in-one into this position, the scanner cover can open suddenly and be damaged. You *must* support the scanner cover to keep it from opening.

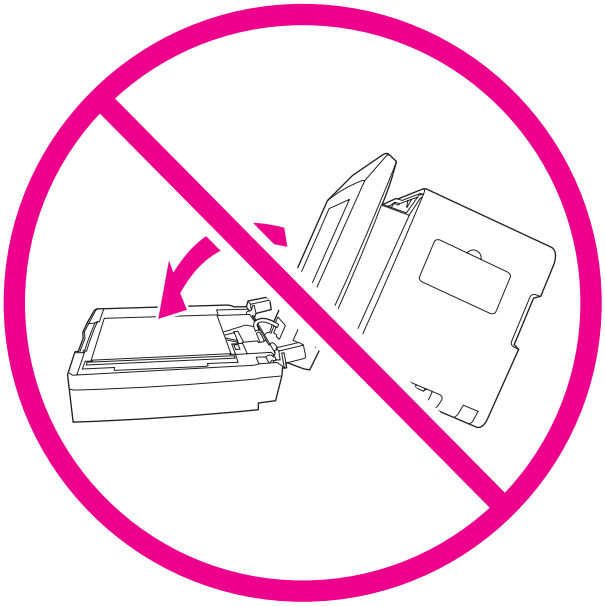

11. Perform the following tasks after completing this procedure.
    - Replace the all-in-one on tray 3, if that tray was installed.
    - Replace the tray 2 cassette.
    - Open the print-cartridge door and install the print cartridge.
    - Plug the power cord into an electrical outlet, and turn on the all-in-one.

Download Free Service Manual and Resetter Printer at http://printer1.blogspot.com

Replacing the tray 2 and optional tray 3 separation pad

1. Remove tray 2 or tray 3.

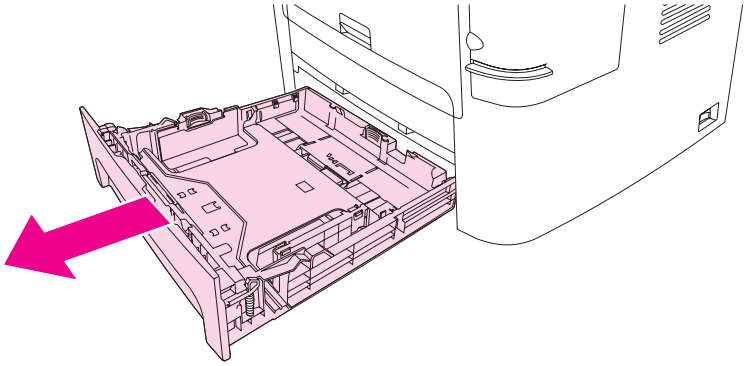

Figure 3-17 Replace the tray 2 or tray 3 separation pad (1 of 6)

2. Locate the separation pad.

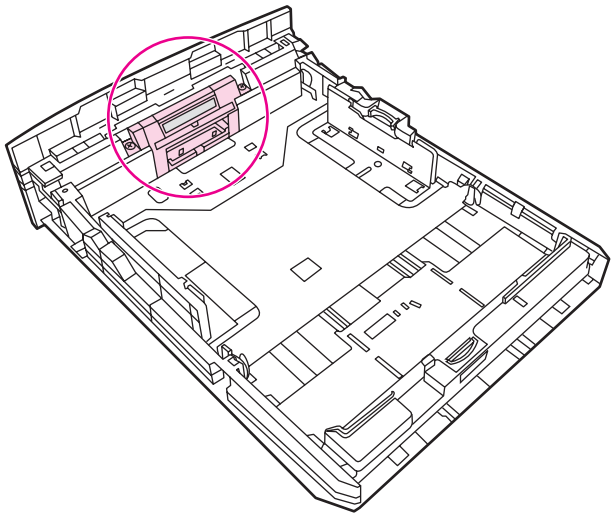

Figure 3-18 Replace the tray 2 or tray 3 separation pad (2 of 6)

Download Free Service Manual and Resetter Printer at http://printer1.blogspot.com

3. Remove two screws.

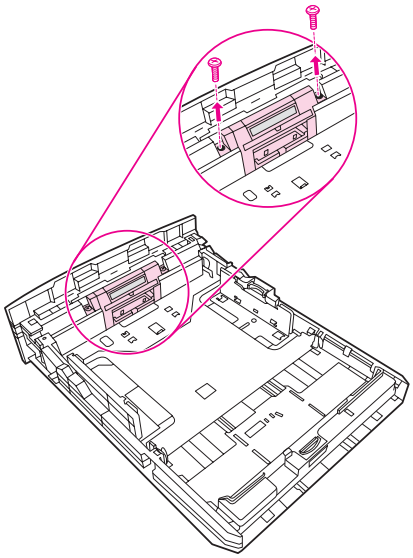

Figure 3-19 Replace the tray 2 or tray 3 separation pad (3 of 6)

4. Remove the separation pad.

CAUTION Before you remove the separation pad, take note of how it is positioned in the tray.

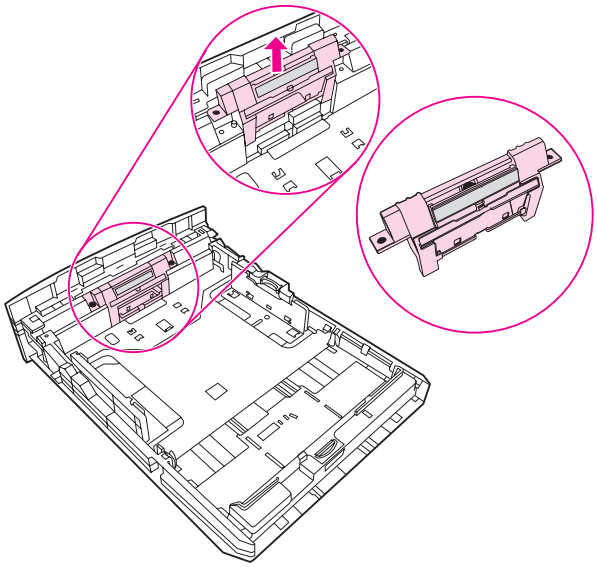

Figure 3-20 Replace the tray 2 or tray 3 separation pad (4 of 6)

Download Free Service Manual and Resetter Printer at http://printer1.blogspot.com

5. Install the replacement separation pad.

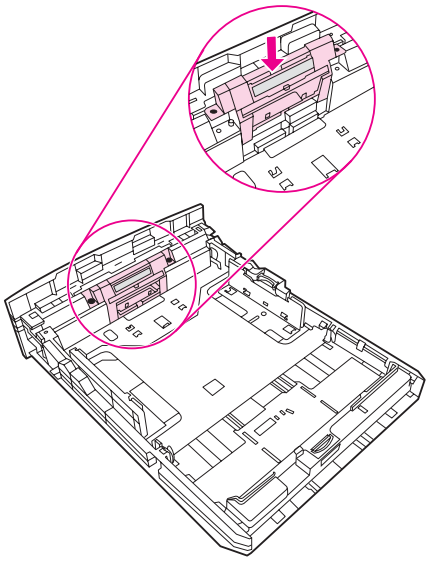

Figure 3-21 Replace the tray 2 or tray 3 separation pad (5 of 6)

6. Replace the two screws, and return the tray to the all-in-one.

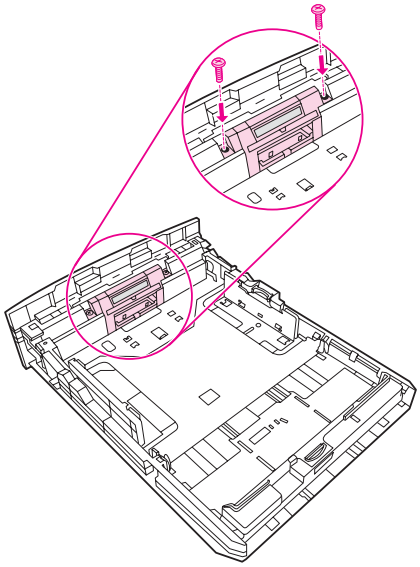

Figure 3-22 Replace the tray 2 or tray 3 separation pad (6 of 6)

Download Free Service Manual and Resetter Printer at http://printer1.blogspot.com

Replacing the ADF pickup-roller assembly

1. Turn off the all-in-one and unplug the power cord from the electrical outlet.

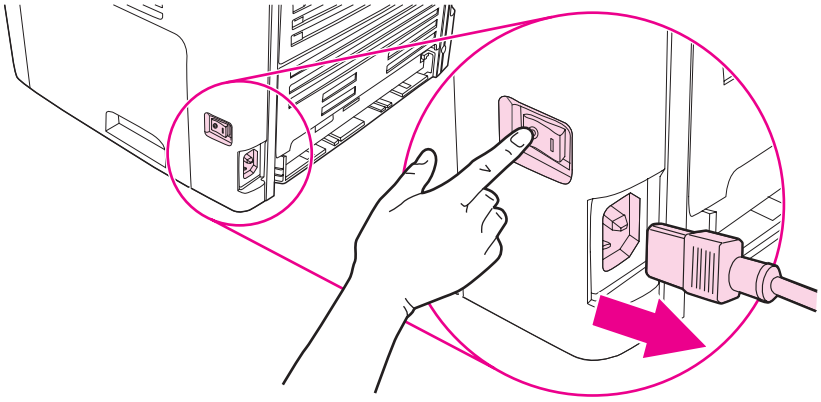

Figure 3-23 Replacing the ADF pickup-roller assembly (1 of 9)

2. Open the ADF cover.

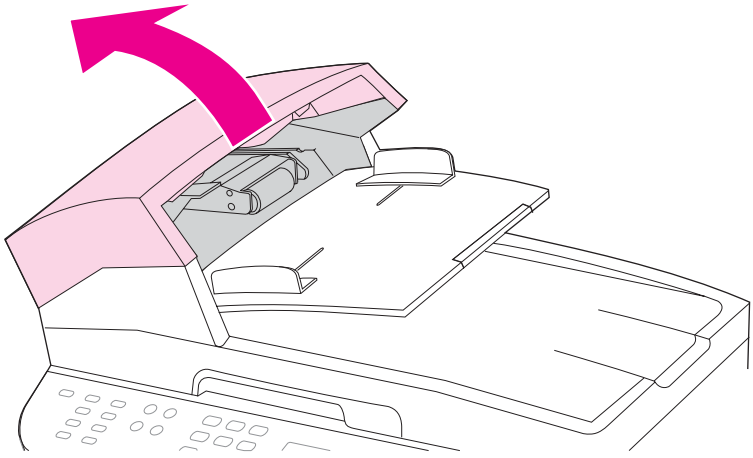

Figure 3-24 Replacing the ADF pickup-roller assembly (2 of 9)

Download Free Service Manual and Resetter Printer at http://printer1.blogspot.com

3. Release the ADF pickup-roller torsion spring.

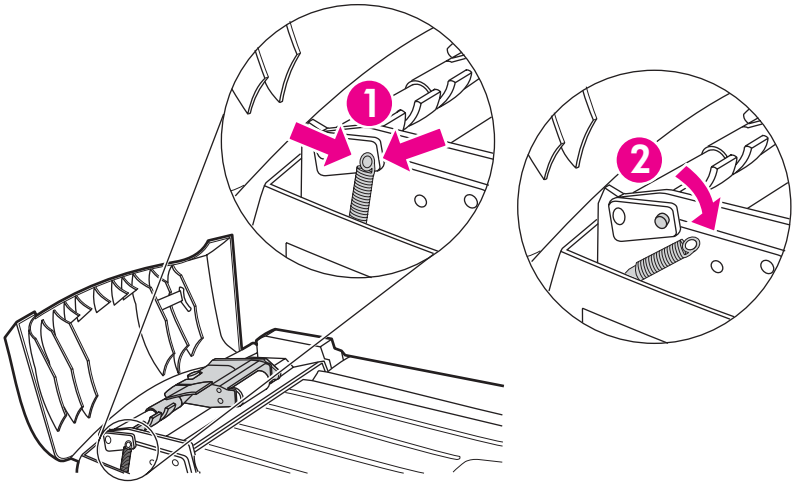

Figure 3-25 Replacing the ADF pickup-roller assembly (3 of 9)

4. Lift up the ADF pickup-roller assembly.

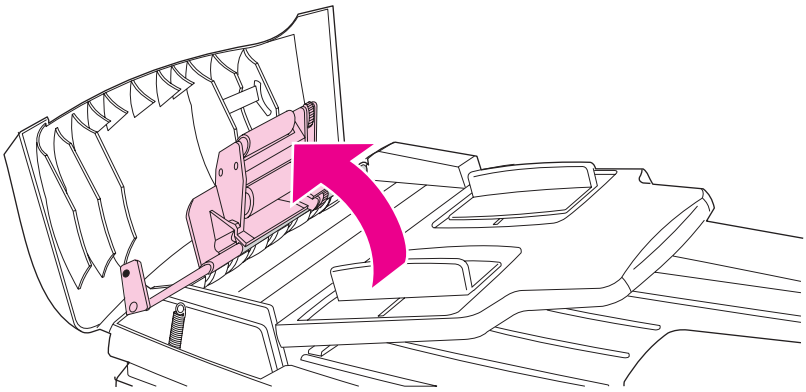

Figure 3-26 Replacing the ADF pickup-roller assembly (4 of 9)

Download Free Service Manual and Resetter Printer at http://printer1.blogspot.com

5. Rotate the end of the assembly away from the ADF and then slide it out of the ADF to remove the assembly.

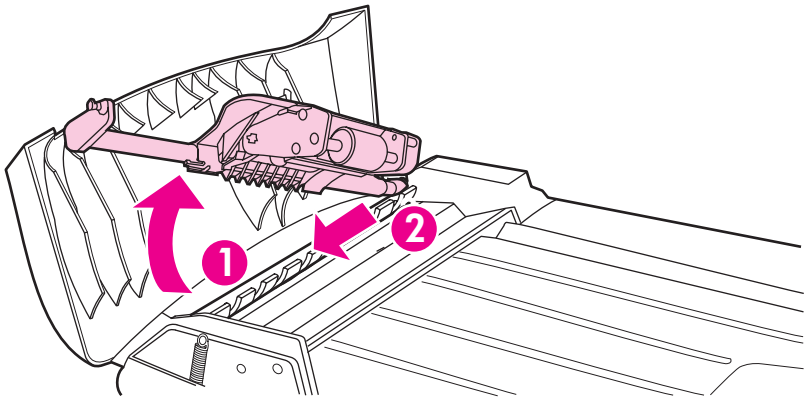

Figure 3-27 Replacing the ADF pickup-roller assembly (5 of 9)

6. Install the replacement assembly.

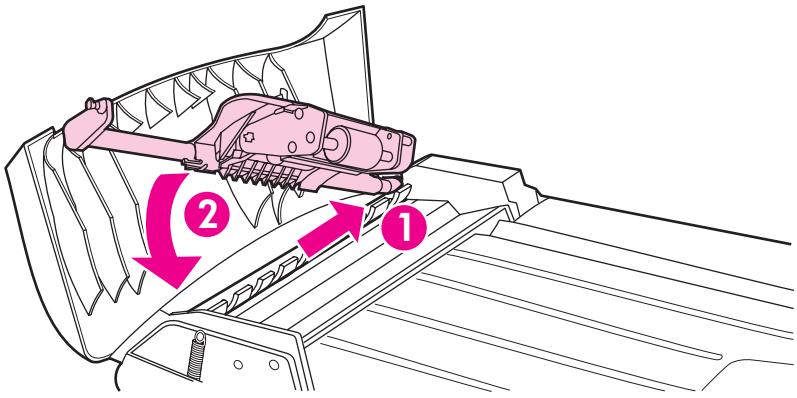

Figure 3-28 Replacing the ADF pickup-roller assembly (6 of 9)

Download Free Service Manual and Resetter Printer at http://printer1.blogspot.com

7. Reattach the ADF pickup-roller tension spring.

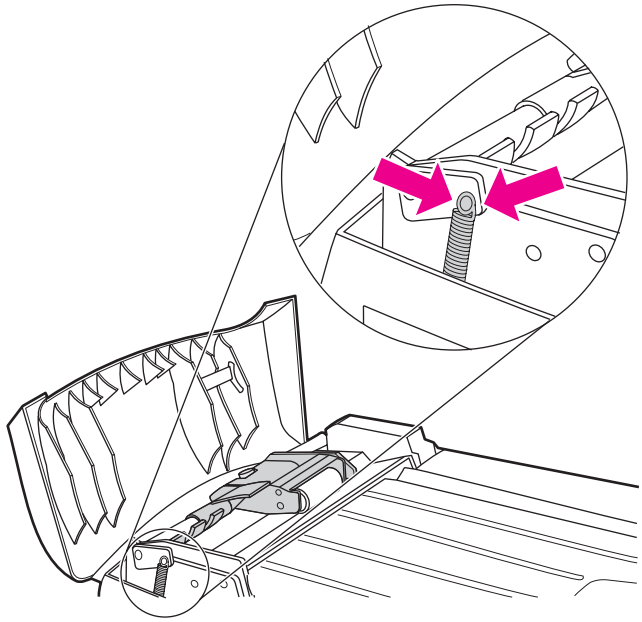

Figure 3-29 Replacing the ADF pickup-roller assembly (7 of 9)

8. Lower the green lever and close the ADF cover.

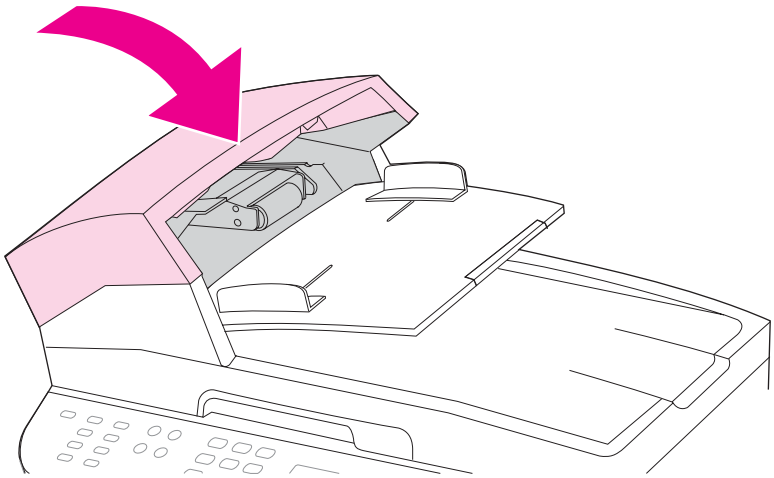

Figure 3-30 Replacing the ADF pickup-roller assembly (8 of 9)

Download Free Service Manual and Resetter Printer at http://printer1.blogspot.com

9. Plug in the all-in-one, and then turn it on.

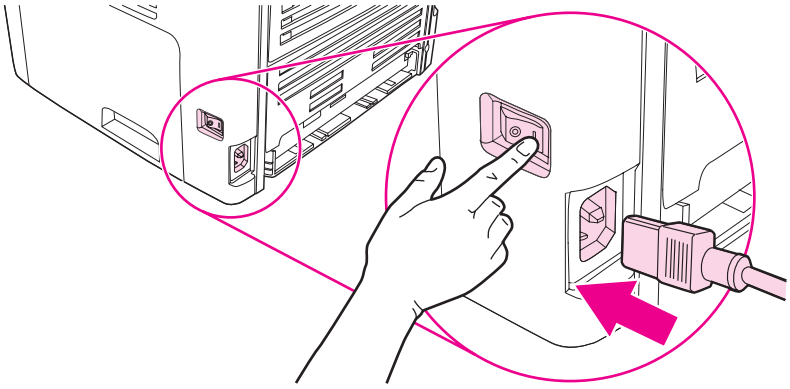

Figure 3-31 Replacing the ADF pickup-roller assembly (9 of 9)

HP policy on non-HP supplies

Hewlett-Packard Company cannot recommend the use of non-HP supplies, either new or remanufactured. Because they are not HP products, HP cannot influence their design or control their quality. Service or repairs required as a result of using a non-HP supply will *not* be covered under the warranty.

When you insert a supply into the all-in-one, the all-in-one will inform you if the supply is not a genuine HP supply. If you insert a genuine HP supply that has reached the low state from another HP device, the all-in-one identifies the supply as non-HP. Simply return the supply to the original device to reactivate the HP features and functionality.

Resetting the all-in-one for non-HP supplies

When you install a non-HP print cartridge, **Unauthorized** appears on the control-panel display. In order to print with this supply, you must press ✔ when you install this non-HP supply.

△ **CAUTION** The all-in-one will *not* stop printing when this type of supply is empty. Damage to the all-in-one could occur if the all-in-one prints with an empty non-HP print cartridge. See Hewlett-Packard limited warranty statement on page 326 and Print Cartridge Limited Warranty Statement on page 327.

HP fraud hotline

Call the HP fraud hotline if the all-in-one or HP ToolboxFX indicates that the print cartridge is not an HP print cartridge and you think that it is genuine. HP will help determine if the product is genuine and take steps to resolve the problem.

Download Free Service Manual and Resetter Printer at http://printer1.blogspot.com

Your print cartridge might not be a genuine HP product if you notice the following issues:

- You are experiencing a large number of problems with the print cartridge.
- The print cartridge does not look like it usually does (for example, the pull tab or the box is different).

In the United States, call toll-free: 1-877-219-3183.

Outside the United States, you can call collect. Dial the operator and ask to place a collect call to this telephone number: 1-770-263-4745. If you do not speak English, a representative at the HP fraud hotline who speaks your language will assist you. Or, if someone who speaks your language is not available, a language line interpreter will connect approximately one minute after the beginning of the call. The language line interpreter is a service that will translate between you and the representative for the HP fraud hotline.

Download Free Service Manual and Resetter Printer at http://printer1.blogspot.com

Cleaning the all-in-one

NOTE Use a soft, damp, lint-free cloth to wipe dust, smudges, and stains off of the exterior of the all-in-one.

Cleaning the flatbed scanner glass

Dirty glass, from fingerprints, smudges, hair, and so on, slows down performance and affects the accuracy of special features such as fit-to-page and copy.

NOTE If streaks or other defects appear only on copies produced from the ADF, clean the scanner strip (step 3). It is not necessary to clean the flatbed scanner glass.

1. Turn off the all-in-one, unplug the power cord from the electrical outlet, and raise the scanner cover.
2. Clean the glass by using a soft cloth or sponge that has been moistened with nonabrasive glass cleaner.

CAUTION Do not use abrasives, acetone, benzene, ammonia, ethyl alcohol, or carbon tetrachloride on any part of the all-in-one; these can damage the all-in-one. Do not place liquids directly on the glass. They might seep under it and damage the all-in-one.

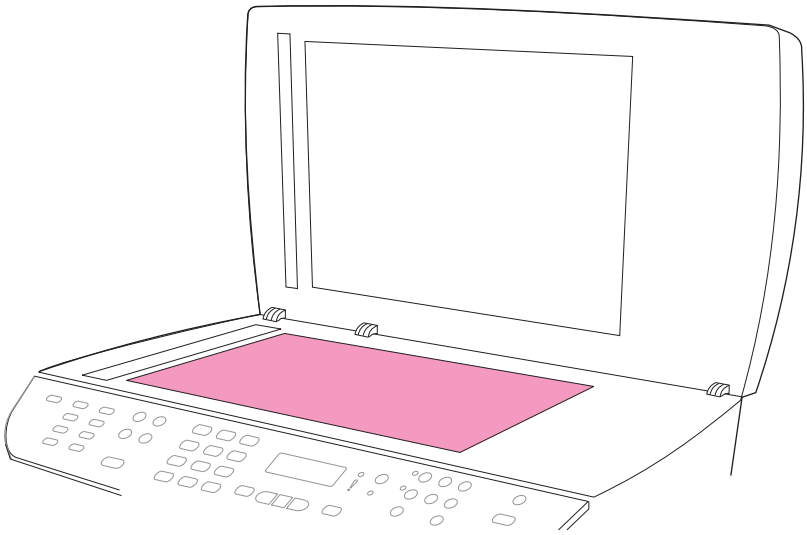

Figure 3-32 Cleaning the scanner glass (1 of 2)

Download Free Service Manual and Resetter Printer at http://printer1.blogspot.com

3. Clean the scanner strip by using a soft cloth or sponge that has been moistened with nonabrasive glass cleaner.

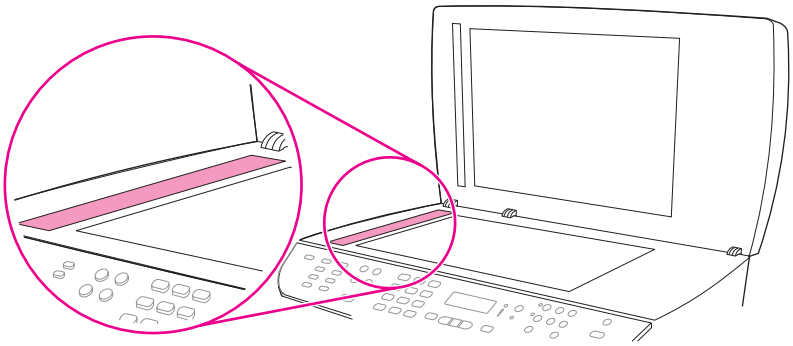

Figure 3-33 Cleaning the scanner glass (2 of 2)

Cleaning the scanner-cover backing

1. Turn off the all-in-one, unplug the power cord from the electrical outlet, and raise the scanner cover.
2. Clean the white scanner-cover backing by using a soft cloth or sponge that has been moistened with mild soap and warm water. Also, clean the scanner strip (callout 1) next to the flatbed scanner glass.

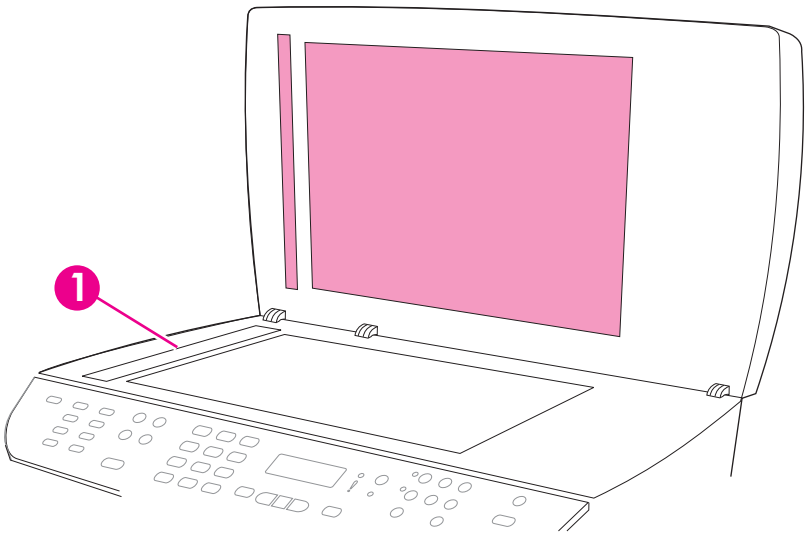

Figure 3-34 Cleaning the scanner-cover backing

3. Wash the backing gently to loosen debris; do not scrub the backing.
4. Dry the backing by using a chamois or soft cloth.

Download Free Service Manual and Resetter Printer at http://printer1.blogspot.com

CAUTION Do not use paper-based wipes because they might scratch the backing.

5. If this does not clean the backing well enough, repeat the previous steps and use isopropyl alcohol to dampen the cloth or sponge, and then wipe the backing thoroughly with a damp cloth to remove any residual alcohol.

Cleaning the tray 2 pickup roller

1. Perform the removal steps from Replacing the tray 2 pickup roller on page 42.
2. Gently wipe the roller with a lint-free cloth moistened with water.

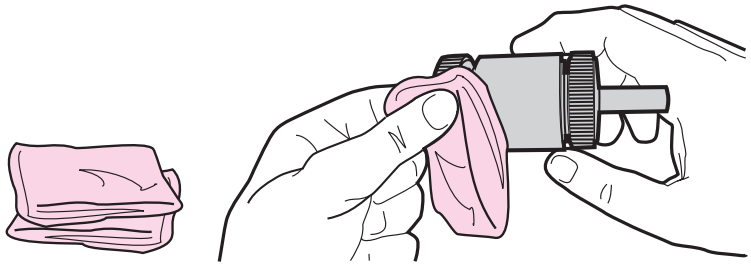

Figure 3-35 Cleaning the tray 2 pickup roller (1 of 6)

3. Use a dry lint-free cloth to wipe the roller and remove loosened dirt.

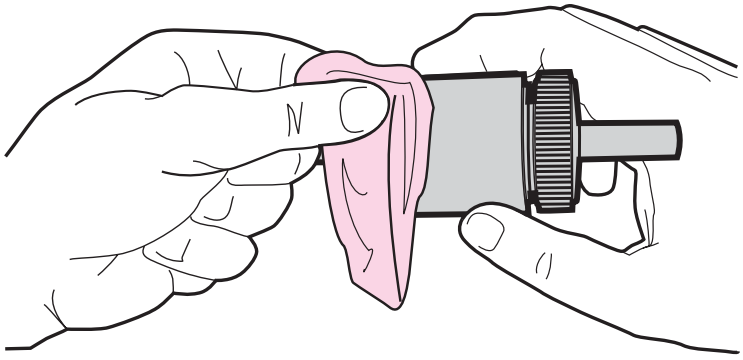

Figure 3-36 Cleaning the tray 2 pickup roller (2 of 6)

Download Free Service Manual and Resetter Printer at http://printer1.blogspot.com

4. Allow the roller to dry completely before you reinstall it.

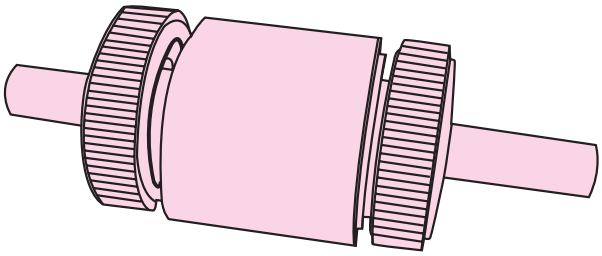

Figure 3-37 Cleaning the tray 2 pickup roller (3 of 6)

5. Insert the left side of the pickup-roller shaft into the left slot (callout 1), and insert the right-side shaft (the side with the notch) into the right slot (callout 2).

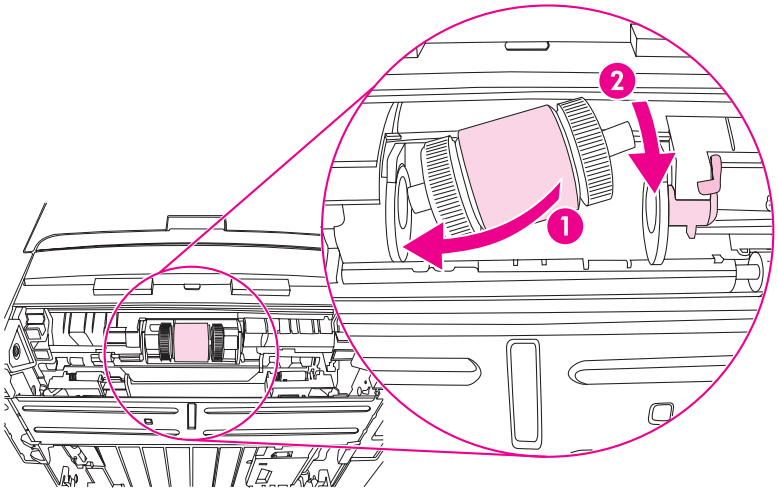

Figure 3-38 Cleaning the tray 2 pickup roller (4 of 6)

6. Rotate the roller shaft until the notch engages with the drive shaft and clicks into place.

Download Free Service Manual and Resetter Printer at http://printer1.blogspot.com

7. Place the left retaining collar over the end of the roller shaft, align the tab on the collar with the slot in the plastic bracket, and then slide the collar toward the pickup roller.

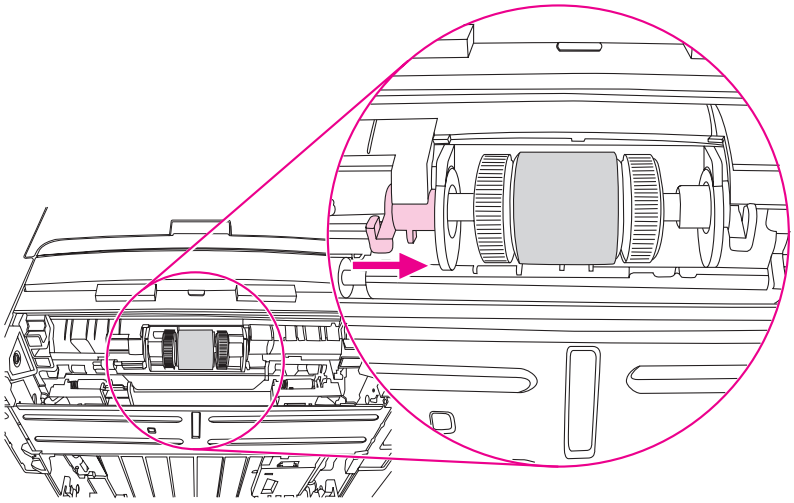

Figure 3-39 Cleaning the tray 2 pickup roller (5 of 6)

8. With the tab on the right collar aligned with the slot on the plastic bracket, slide the collar towards the pickup roller. Rotate the right and left retaining collars down into the locked position.

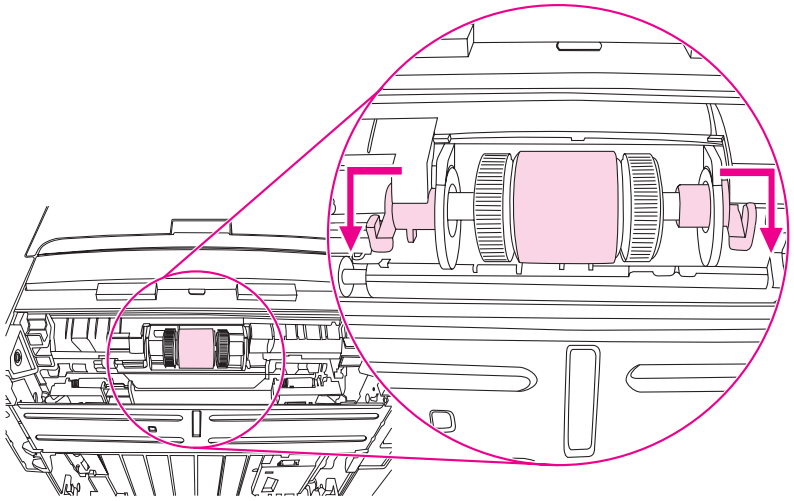

Figure 3-40 Cleaning the tray 2 pickup roller (6 of 6)

9. Push up on the duplex assembly until it locks into place, and place the all-in-one upright on the work surface with the top of the all-in-one facing up.

Download Free Service Manual and Resetter Printer at http://printer1.blogspot.com

WARNING! When you move the all-in-one into this position, the scanner cover can open suddenly and be damaged. You *must* support the scanner cover to keep it from opening.

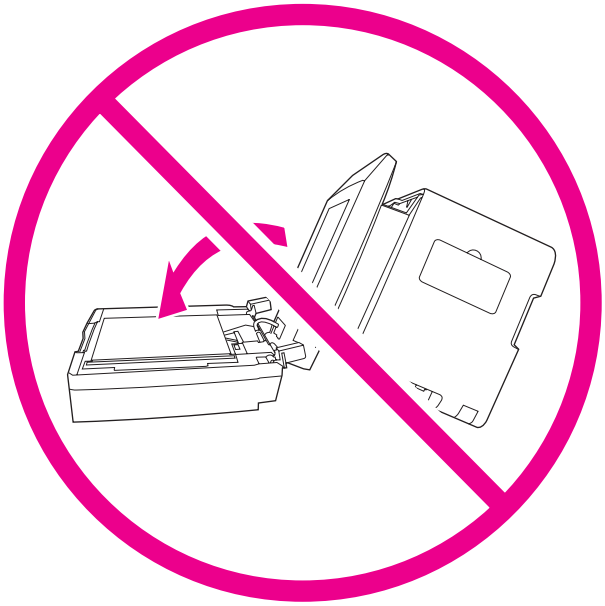

10. Perform the following tasks after completing this procedure.
    - Replace the all-in-one on tray 3, if that tray was installed.
    - Replace the tray 2 cassette.
    - Open the print-cartridge door and install the print cartridge.
    - Plug the power cord into an electrical outlet, and turn on the all-in-one.

Download Free Service Manual and Resetter Printer at http://printer1.blogspot.com

Cleaning the ADF pickup-roller assembly

1. Perform the removal steps from Replacing the ADF pickup-roller assembly on page 50.
2. Wipe the assembly with a soft cloth.

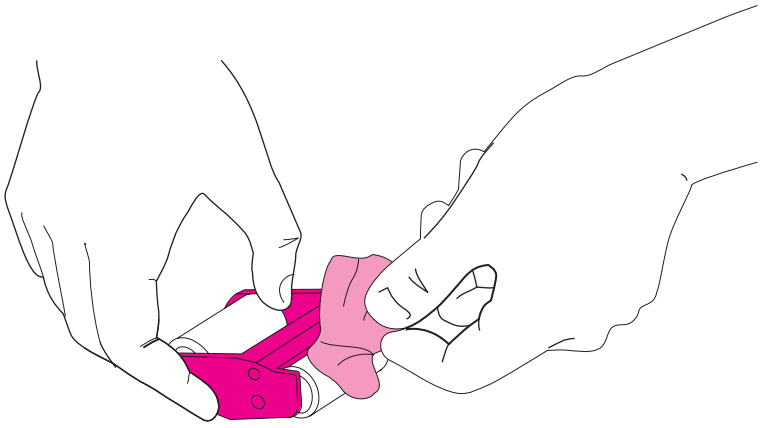

Figure 3-41 Cleaning the ADF pickup-roller assembly (1 of 7)

3. Return the assembly to the same place in the ADF. The largest roller goes in back, and the gear side is away from you.

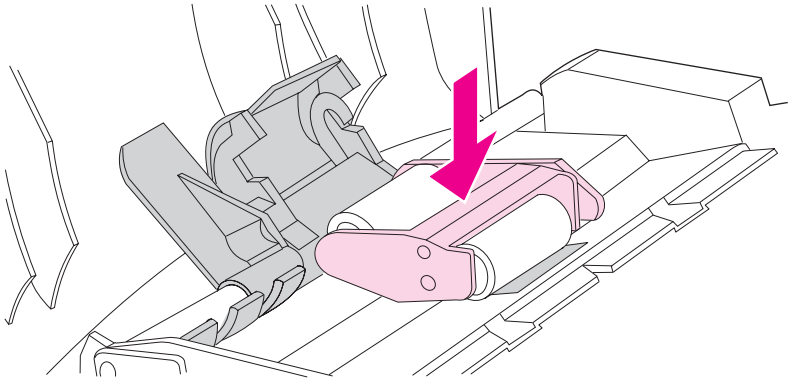

Figure 3-42 Cleaning the ADF pickup-roller assembly (2 of 7)

Download Free Service Manual and Resetter Printer at http://printer1.blogspot.com

4. Lower the green lever until the flat green part fits between the rollers. Press down on the green lever until you hear a snap.

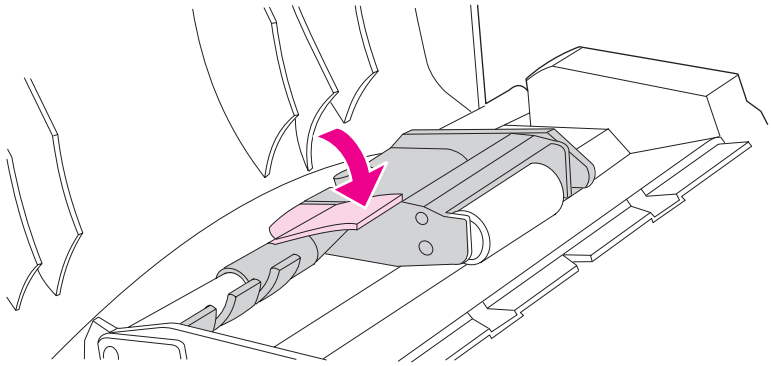

Figure 3-43 Cleaning the ADF pickup-roller assembly (3 of 7)

5. To check for correct installation, lift the green lever until it remains open. The pickup-roller assembly should be secured to the lever and should not fall out.

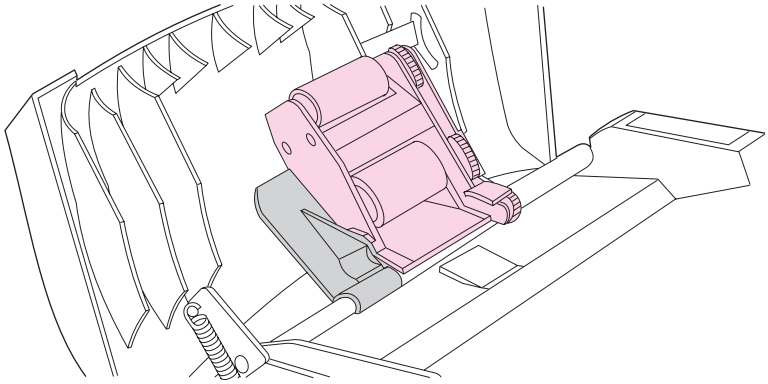

Figure 3-44 Cleaning the ADF pickup-roller assembly (4 of 7)

Download Free Service Manual and Resetter Printer at http://printer1.blogspot.com

6. Make sure that both sides of the assembly are secured with the green hooks.

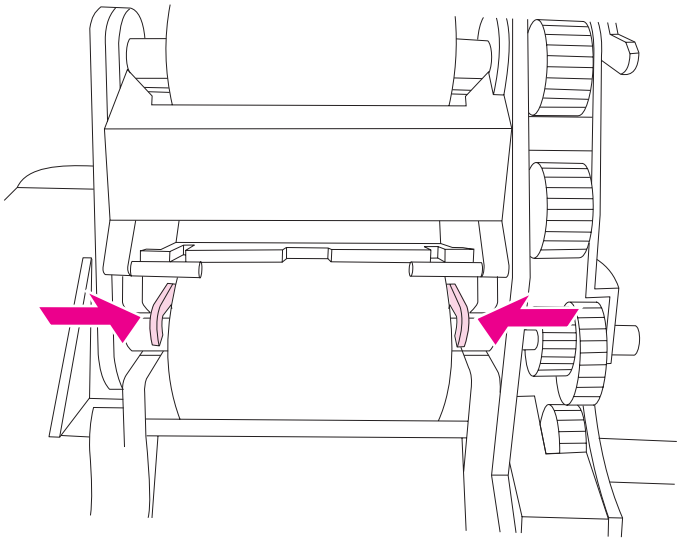

Figure 3-45 Cleaning the ADF pickup-roller assembly (5 of 7)

7. Lower the green lever and the roller assembly and close the ADF cover.

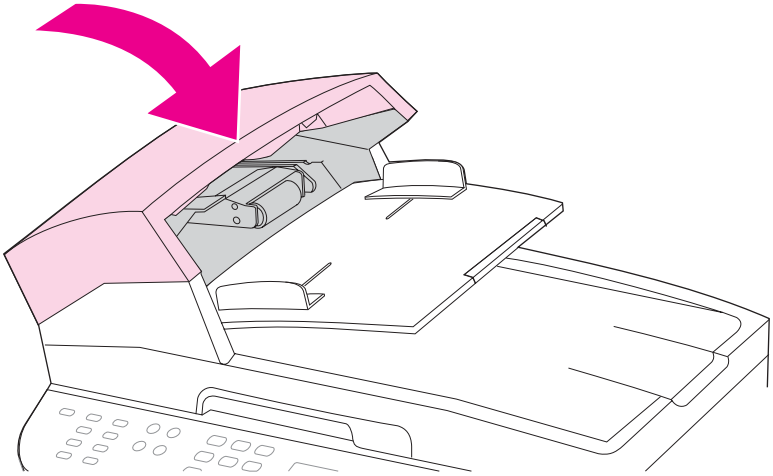

Figure 3-46 Cleaning the ADF pickup-roller assembly (6 of 7)

Download Free Service Manual and Resetter Printer at http://printer1.blogspot.com

8. Plug in the all-in-one, and then turn it on.

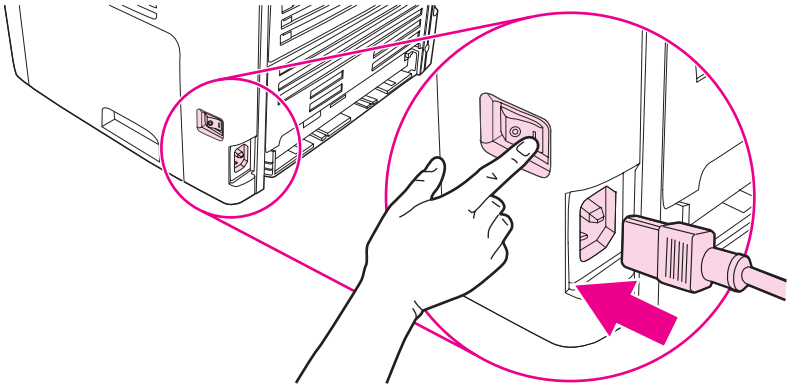

Figure 3-47 Cleaning the ADF pickup-roller assembly (7 of 7)

Cleaning the print path

During the printing process, paper, toner, and dust particles can accumulate inside the all-in-one. Over time, this buildup can cause print-quality problems such as toner specks or smearing. The all-in-one has a cleaning mode that can correct and prevent these types of problems.

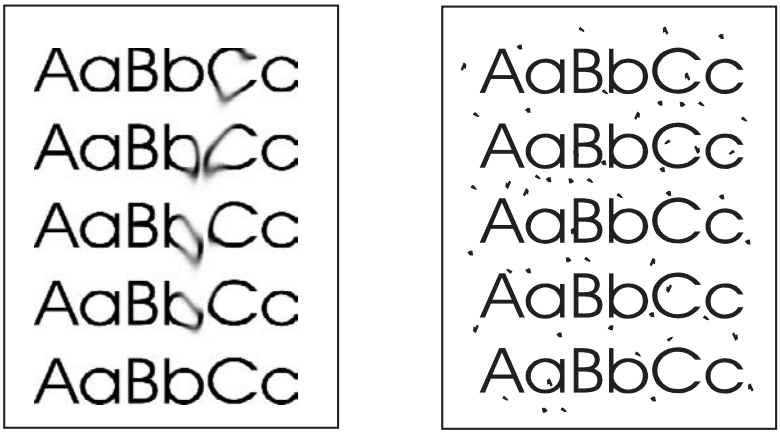

Figure 3-48 Cleaning the print path

Cleaning the print path by using HP ToolboxFX

1. Make sure that the all-in-one is turned on and in the **Ready** state.
2. Open the HP ToolboxFX.

Download Free Service Manual and Resetter Printer at http://printer1.blogspot.com

3. On the **Troubleshooting** tab, click **Maintenance**, click **Cleaning Page**, and then click **Print**. A page with a pattern prints from the all-in-one.
4. At the all-in-one, remove any print media that might be in tray 1 (the priority input slot).
5. Remove the page that printed and load it face-down into tray 1.
6. At the computer, click **Clean**.

Cleaning the print path by using the all-in-one control panel

1. Press Menu.
2. Use the < or the > button to find the **Service** menu.
3. Press ✔, and then use the < or the > button to find **Cleaning Mode**.
4. Press ✔.
5. Load plain letter or A4 paper and begin the cleaning process. The page feeds through the all-in-one slowly. Discard the page when the process is completed.

Download Free Service Manual and Resetter Printer at http://printer1.blogspot.com

Managing the all-in-one

Information pages

Information pages reside within the all-in-one memory. These pages help to diagnose and solve problems with the all-in-one.

NOTE If the all-in-one language was not correctly set during installation, you can set the language manually so the information pages print in one of the supported languages. Change the language by using HP ToolboxFX.

To print the demo page

1. Press Menu.
2. Use the < or the > button to find **Reports**, and then press ✔.
3. Use the < or the > button to find **Demo page**, and then press ✔.

   NOTE You can also print the demo page by using the HP ToolboxFX.

To print the usage page

1. Press Menu.
2. Use the < or the > button to find **Reports**, and then press ✔.
3. Use the < or the > button to find **Usage page**, and then press ✔.

To print the configuration page

1. Press Menu.
2. Use the < or the > button to find **Reports**, and then press ✔.

Download Free Service Manual and Resetter Printer at http://printer1.blogspot.com

3. Use the < or the > button to find **Config report**, and then press ✔.

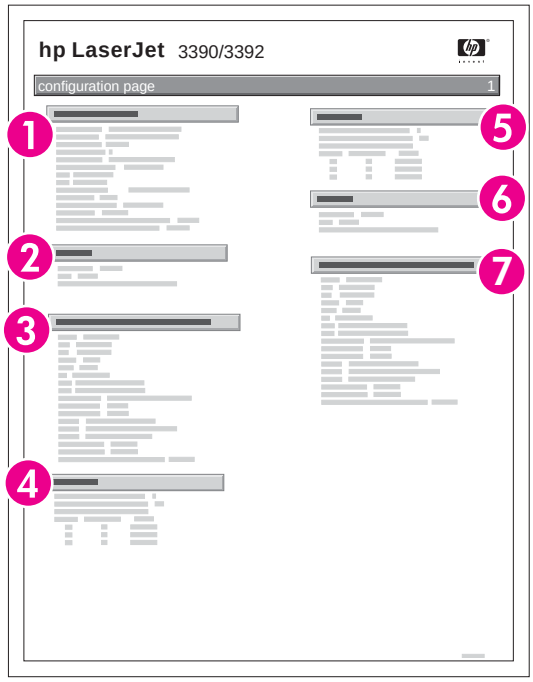

1	**Product Information**. This section contains basic information about the all-in-one, such as the all-in-one name and serial number.
2	**Memory**. This section lists memory-related information such as the total memory that is installed.
3	**Paper Settings**. This section lists information about the media type for each tray and about the type settings for all of the media that the all-in-one supports
4	**Copy Settings**. This section lists the all-in-one default copy settings.
5	**Product Settings**. This section lists information that is gathered during software installation, including the language and country/region name.
6	**Installed personalities and Options**. This section contains information about optional items that might be installed, such as a DIMM.
7	**Print Settings**. This section contains information about all-in-one settings that are configured in the printer driver or the HP ToolboxFX.
A second page also prints. On this page, the **Fax Settings** section provides details about the all-in-one fax settings.	

To print the supplies status page

1. Press Menu.
2. Use the < or the > button to find **Reports**, and then press ✔.

Download Free Service Manual and Resetter Printer at http://printer1.blogspot.com

3. Use the < or the > button to find **Supplies Status**, and then press ✔.

NOTE You can also print the supplies status page by using the HP ToolboxFX.

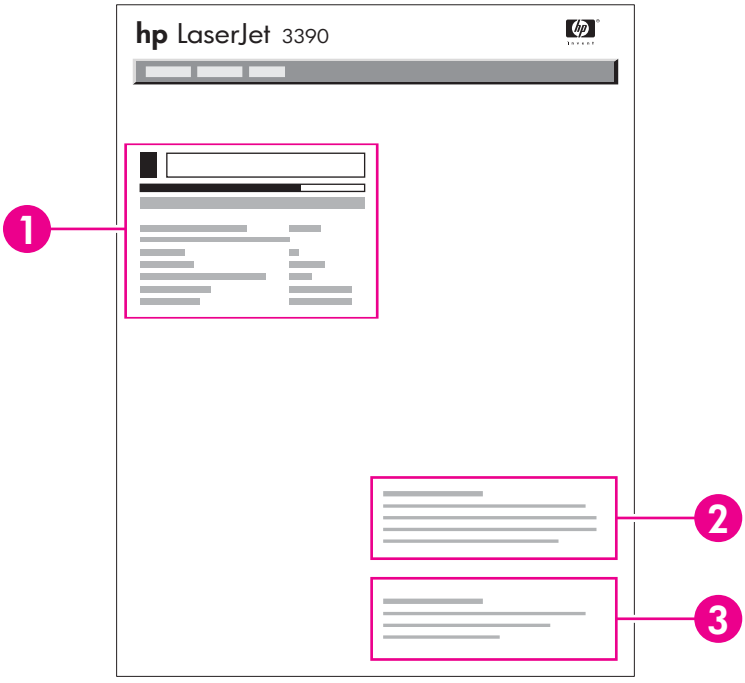

1	**Print-cartridge area**. This section contains information about HP print cartridges. This information includes the print-cartridge part number, whether the cartridge toner level is low, and the remaining life for the cartridge (shown as a graphic, and as the estimated number of pages remaining). This information might not be provided for non-HP supplies. In some cases, if a non-HP supply is installed, an alert message appears instead.
2	**Ordering Information**. This section contains basic information about how to order new HP supplies. See Ordering supplies on page 34 .
3	**Recycling Information**. This section lists the all-in-one default copy settings. See Replacing and recycling supplies on page 35 .

To print the network configuration page

1. Press Menu.
2. Use the < or the > button to find **Reports**, and then press ✔.
3. Use the < or the > button to find **Network config.**, and then press ✔.

Download Free Service Manual and Resetter Printer at http://printer1.blogspot.com

Using the HP ToolboxFX

The HP ToolboxFX is a Web-based program that you can use to complete the following tasks:

- Check the all-in-one status.
- Configure the all-in-one settings.
- View troubleshooting information.
- View online documentation.

You can view the HP ToolboxFX when the all-in-one is directly connected to your computer or when it is connected to the network. You must perform a typical software installation to use HP ToolboxFX.

NOTE The HP ToolboxFX is not supported for Windows 98 SE or Macintosh operating systems. To use the HP ToolboxFX, you must have TCP/IP protocol installed on your computer.

NOTE You do not have to have Internet access to open and use the HP ToolboxFX.

To view the HP ToolboxFX

Open the HP ToolboxFX in one of these ways:

- In the Windows system tray or on your desktop, double-click the HP ToolboxFX icon.
- On the Windows **Start** menu, click **Programs** (or **All Programs** in Windows XP), click **HP**, click **HP LaserJet 3390/3392 all-in-one**, and then click **HP ToolboxFX**.

The HP ToolboxFX software contains the following tabs, and the information about each tab is on the specified page:

- Status on page 70
- Alerts on page 71
- Fax on page 72
- Help (Documentation) on page 75
- System settings on page 76
- Print settings on page 78
- Network settings on page 79

Status

The HP ToolboxFX **Status** tab contains links to the following main pages:

- **Device Status**. View all-in-one status information. This page indicates all-in-one conditions such as a jam or an empty tray. After you correct a problem with the all-in-one, click **Refresh Status** to update the all-in-one status.
- **Supplies Status**. View detailed supplies status such as the estimated percentage of toner remaining in the print cartridge and the number of pages that have been printed with the current print cartridge. This page also has links to order supplies and to find recycling information.

Download Free Service Manual and Resetter Printer at http://printer1.blogspot.com

- **Device configuration**. View a detailed description of the current all-in-one configuration, including the amount of memory that is installed and whether optional trays are installed.
- **Network configuration**. View a detailed description of the current network configuration, including the IP address and network status.
- **Print Info Pages**. Print the Configuration page and various other information pages that are available for the all-in-one, such as the Supplies Status page and the Demo page.
- **Event Log**. View a history of all-in-one errors. The most recent error is at the top of the list.

Event log

The Event log is a four-column table where the all-in-one events are logged for your reference. The log contains codes that correspond to the error messages that appears on the all-in-one control-panel display. The number in the Page Count column specifies the total number of pages that the all-in-one had printed when the error occurred. The Event log also contains a brief description of the error. For more information about error messages, see Control-panel messages on page 203.

Alerts

The HP ToolboxFX **Alerts** tab contains links to the following main pages:

- **Set up Status Alerts**. Set up the all-in-one to send pop-up alerts for certain events, such as low toner levels.
- **Set up E-mail Alerts**. Set up the all-in-one to send e-mail alert messages for certain events, such as low toner levels.

Set up status alerts

Use HP ToolboxFX to set up the all-in-one so that it issues pop-up alerts when certain events occur. Events that trigger alerts include jams, low levels of toner in HP print cartridges, non-HP print cartridge in use, empty input trays, and specific error messages.

Select the pop-up format, the tray icon format, or both for the alerts. The pop-up alerts only appear when the all-in-one is printing from the computer on which you set up the alerts.

NOTE You must click **Apply** before changes take effect.

Set up e-mail alerts

Use HP ToolboxFX to configure up to two e-mail addresses to receive alerts when certain events occur. You can specify different events for each e-mail address. Specify the information for the e-mail server that will send out the e-mail alert messages for the all-in-one.

NOTE You must click **Apply** before changes take effect.

Download Free Service Manual and Resetter Printer at http://printer1.blogspot.com

Fax

Use the HP ToolboxFX **Fax** tab to perform fax tasks from the computer. The **Fax** tab contains links to the following main pages:

- **Fax Tasks**. Perform such tasks as sending a fax or clearing the fax memory, or set the fax receive mode.
- **Fax Phone Book**. Add, edit, or delete entries in the all-in-one phone book.
- **Fax Send Log**. View all of the recent faxes that have been sent from the all-in-one.
- **Fax Receive log**. View all of the recent faxes that have been received by the all-in-one.
- **Fax Dat Properties**. Manage the space used to store faxes on a computer. These settings apply only if you have chosen to send or receive faxes remotely from the computer.

Fax tasks

The following three options are available when receiving a fax:

- **Print the fax**. You can also select an option to have a message appear on a computer to notify about when the fax was printed.
- **Receive the fax on your computer**. You can also select an option to have a message appear on a computer to notify about when the fax arrives. If the fax machine is connected to multiple computers, only one computer can be designated to receive faxes.
- **Forward the fax to another fax machine**.

For more information about fax tasks, see Fax on page 72.

NOTE You must click **Apply** before changes take effect.

Fax phone book

Use the HP ToolboxFX Fax phone book to add and remove individuals or groups on a speed-dial list, import phone books from a variety of sources, and update and maintain a contact list.

- To add an individual contact to a speed-dial list:
  1. Select the check box next to the speed dial number that you want to specify.
  2. Type the contact name in the **Contact Name** window.
  3. Type the fax number in the **Fax number** window.
  4. Click **Add/Edit**.
- To add a group of contacts to a speed-dial list:
  1. Select the check box next to the speed-dial number that you want to specify.
  2. Click **New/Edit Group**.

Download Free Service Manual and Resetter Printer at http://printer1.blogspot.com

3. Double-click a contact name from the list on the left to move it to the group list on the right, or select a name on the left and then click the appropriate arrow to move it to the group list on the right. You can also use those two methods to move names from right to left.

4. When you have created a group, type a name in the **Group name** window, and then click **OK**.

- To edit an existing individual speed-dial entry:

  1. Click anywhere on the row that contains the contact name to select it.

  2. Type changes in the appropriate windows, and then click **Add/Edit**.

     You can also make changes directly in the phone book directory list by clicking the entry and typing your changes. Make sure that you do not have a check mark in the **Select** column.

- To edit an existing group-speed-dial entry:

  1. Click anywhere on the row containing the group name to select it, and then click **New/Edit Group**.

  2. Make any required changes, and then click **OK**.

     You can make changes to the name of the group directly in the phone book directory list by clicking the entry and typing your changes. Make sure that you do not have a check mark in the **Select** column.

- To delete an entry from the speed-dial list: Select the item and then click **Delete**.

- To move speed-dial entries:

  1. Select the entry and then click **Move**, or you can select **Move** and then specify the entry in the dialog box.

  2. Select **Next empty row**, or specify the number of the row where you want to move the entry.

     NOTE If you specify a row that is occupied, the new entry will overwrite the existing entry.

- To import contacts from a phone book that exists in Lotus Notes, Outlook, or Outlook Express:

  1. Click **Import Phone Book**.

  2. Select the appropriate software program, navigate to the appropriate file, and then click **OK**.

     You can also select individual entries from the phone book instead of importing the entire phone book.

- To select all of the entries in your speed-dial list: Click the **Select** column heading.

In addition to numerical digits, the following are valid characters for fax numbers:

- (
-)
- +
- -

Download Free Service Manual and Resetter Printer at http://printer1.blogspot.com

- *
- #
- R
- W
- .
- ,
- <space>

NOTE You must click **Apply** before changes take effect.

Download Free Service Manual and Resetter Printer at http://printer1.blogspot.com

Fax send log

The HP ToolboxFX Fax send log lists all recently sent faxes and information about them, including the date and time sent, job number, fax number, page count, and the results.

When you send a fax from a computer that is connected to the all-in-one, the fax contains a **View** link. Click this link to open a new page that provides information about the fax.

Click any column heading in the Fax send log to re-sort the information in that column in ascending or descending order.

The Results column shows the status of the fax. If the fax attempt was unsuccessful, this column provides a description of why the fax was not sent.

NOTE You must click **Apply** before changes take effect.

For more information about faxes, see Fax on page 72.

Fax receive log

The HP ToolboxFX Fax receive log provides a list of all recently received faxes and information about them including the date and time received, job number, fax number, page count, results, and an abbreviated fax image.

When you receive a fax on a computer that is connected to the all-in-one, the fax contains a **View** link. Clicking this link opens a new page that provides information about the fax.

Click on any column heading in the Fax receive log to re-sort the information in that column in ascending or descending order.

The Results column provides the status of the fax. If the fax attempt was unsuccessful, this column provides a description of why the fax was not received.

NOTE You must click **Apply** before changes take effect.

Help (Documentation)

The HP ToolboxFX **Documentation** tab contains links to the following main pages:

- **Troubleshooting**
- **How do I?** View the How Do I? Help for help with specific tasks.
- **Animated Demonstrations**
- **User Guide**. View information about the all-in-one usage, warranty, specifications, and support. The user guide is available in both HTML and PDF format.
- **Install Notes**. View important information about the all-in-one that is not available in the user guide. The late-breaking Install Notes contain last-minute information about the all-in-one (in English only).

Download Free Service Manual and Resetter Printer at http://printer1.blogspot.com

System settings

The HP ToolboxFX **System Settings** tab contains links to the following main pages:

- **Device information**. View information about the all-in-one, such as the all-in-one description and a contact person.
- **Paper handling**. Change the all-in-one paper-handling settings, such as default paper size and default paper type.
- **Print quality**. Change the all-in-one print-quality settings.
- **Paper types**. Change the all-in-one mode settings for a each media type, such as letterhead, prepunched, or glossy paper.
- **System setup**. Change the all-in-one system settings, such as all-in-one language and jam recovery.
- **Service**. Gain access to various procedures that help you maintain the all-in-one.
- **Device polling**. Change the all-in-one polling settings, which determine how often HP ToolboxFX collects data from the all-in-one.
- **Save/restore settings**. Save the current settings for the all-in-one to a file on your computer. Use this file to load the same settings onto another all-in-one or to restore these settings to this all-in-one at a later time.

Device information

The HP ToolboxFX Device information page stores data about your all-in-one for future reference. The information that you type in these fields appears on the Configuration page. You can type any character in each of these fields.

NOTE You must click **Apply** before changes take effect.

Download Free Service Manual and Resetter Printer at http://printer1.blogspot.com

Paper handling

Use the HP ToolboxFX paper-handling options to configure your default settings. These are the same options that are available on the **Paper Handling** and **Printing** menus on the control panel.

You must set the asset number. The asset number is not set at the factory. This number is stored in the all-in-one for identification purposes.

Three options are available for handling print jobs when the all-in-one is out of media:

- Select **Wait for paper to be loaded**.
- Select **Cancel** from the **Paper out action** drop-down list to cancel the print job.
- Select **Override** from the **Paper out time** drop-down list to send the print job to another paper tray.

The **Paper out time** field specifies how long the all-in-one waits before acting on your selections. You can specify from 0 to 3600 seconds.

NOTE You must click **Apply** before changes take effect.

Print quality

Use the HP ToolboxFX print-quality options to improve the appearance of your print jobs. These are the same options that are available on the **Print Quality** menu on the control panel.

The four options provided for controlling print quality are resolution, REt (Resolution Enhancement technology), print density, and Economode.

- **Resolution**. Select 600 resolution for average print jobs and Fast Res 1200 for higher-quality print jobs. Select ProRes 1200 for the highest-quality print job, but a longer printing time.
- **REt**. You can turn on REt, which HP provides for improved print quality.
- **Print density**. For increased print density, select a higher number. For decreased print density, select a lower number.
- **Economode**. Turn Economode on when you are printing average print jobs. Economode reduces print quality, but increases the life of your print cartridge. To increase print quality, turn Economode off. HP does not recommend full-time use of Economode.

NOTE You must click **Apply** before changes take effect.

Paper types

Use these HP ToolboxFX paper-types options to configure print modes that correspond to the various media types. When you select **Restore Modes**, all of the modes are reset to the factory settings.

NOTE You must click **Apply** before changes take effect.

Download Free Service Manual and Resetter Printer at http://printer1.blogspot.com

System setup

Use the HP ToolboxFX system-settings options to configure the settings for printing, faxing, copying, and scanning. These are the same options that are available on the **System Settings** menu on the control panel.

NOTE You must click **Apply** before changes take effect.

Service

During the printing process, paper, toner and dust particles can accumulate inside the all-in-one. Over time, this buildup can cause print-quality problems such as toner specks or smearing. HP ToolboxFX provides an easy method for cleaning the paper path. For more information, see Cleaning the print path on page 65

Device Polling

You can turn off HP ToolboxFX device polling to reduce network traffic, but you will also disable some HP ToolboxFX features: pop-up alerts, fax log updates, the ability to receive faxes to this computer, and scanning using the Scan To button.

To turn device polling on, do *both* of the following tasks:

- Clear **Turn off device polling** in HP ToolboxFX.
- Turn on one of the disabled device-polling features in HP ToolboxFX.

NOTE You must click **Apply** before changes take effect.

Print settings

The HP ToolboxFX **Print Settings** tab contains links to the following main pages:

- **Printing**. Change the default all-in-one print settings, such as number of copies and paper orientation.
- **PCL5e**. View and change the PCL5e settings.
- **PostScript**. View and change the PS settings.

Printing

Use the HP ToolboxFX printing-settings options to configure the settings for all print functions. These are the same options that are available on the **Print Settings** menu on the control panel.

NOTE You must click **Apply** before changes take effect.

Download Free Service Manual and Resetter Printer at http://printer1.blogspot.com

PCL 5e

Use the PCL5e options to configure the settings when you are using the PCL5e print personality. These are the same options that are available on the **PCL5e** menu on the control panel.

NOTE You must click **Apply** before changes take effect.

PostScript

Use the PostScript option when you are using the PostScript print personality. When the **Print PostScript error** option is turned on, the PostScript error page automatically prints when PostScript errors occur.

NOTE You must click **Apply** before changes take effect.

Network settings

The network administrator can use the HP ToolboxFX **Network Settings** tab to control the network-related settings for the all-in-one when it is connected to an IP-based network.

Download Free Service Manual and Resetter Printer at http://printer1.blogspot.com

Using Macintosh Configure Device (Mac OS X V10.3 and Mac OS X V10.4)

Macintosh Configure Device is a Web-based program that provides access to information about the all-in-one (for example, information about supplies status and all-in-one settings). Use Macintosh Configure Device to monitor and manage the all-in-one from the computer

NOTE You must perform a complete software installation to use Macintosh Configure Device.

- Check the all-in-one status and print information pages.
- Check and change all-in-one system settings.
- Check default print settings.
- Check and change fax settings, including fax send, fax receive, fax phone book and speed-dial settings, and fax reports.
- Check and change network settings, including IP configuration, Advanced, mDNS, SNMP, network configuration, and password.

You can view Macintosh Configure Device when the all-in-one is directly connected to your computer or when it is connected to the network.

NOTE You do not have to have Internet access to open and use Macintosh Configure Device.

To view Macintosh Configure Device when the all-in-one is directly connected to the computer

1. Open HP Director by clicking the **HP Director** icon in the dock.
2. In HP Director, click **Settings**.
3. Select **Configure device** to open the Macintosh Configure Device home page in a browser.

To view Macintosh Configure Device when the all-in-one is connected to a network

1. Open one of the following supported Web browsers:
   - Safari 1.2 or later
   - Microsoft Internet Explorer 5.0 or later
   - Netscape Navigator 4.75 or later
   - Opera 6.05 or later
2. Type the IP address of the all-in-one into the Web browser to open the Macintosh Configure Device home page.

Download Free Service Manual and Resetter Printer at http://printer1.blogspot.com

Understanding the Embedded Web server

This all-in-one is equipped with an embedded Web server (EWS), which provides access to information about all-in-one and network activities. A Web server provides an environment in which Web programs can run, much in the same way that an operating system, such as Windows, provides an environment for programs to run on your computer. The output from these programs can then be viewed in a Web browser, such as Microsoft Internet Explorer, Safari, or Netscape Navigator.

An “embedded” Web server resides on a hardware device (such as an all-in-one) or in firmware, rather than as software that is loaded on a network server.

The advantage of an EWS is that it provides an interface to the all-in-one that anyone who has a network-connected all-in-one and computer can use. There is no special software to install or configure, but a supported Web browser must be installed on the computer. To gain access to the EWS, type the IP address for the all-in-one in the address line of the browser. (To find the IP address, print a Configuration page.)

NOTE For Macintosh operating systems, you can use the EWS over a USB connection after installing the Macintosh software that is included with the all-in-one.

Features

Use the EWS to view all-in-one and network status and manage printing functions from a computer. Use the EWS to complete the following tasks:

- View all-in-one status information.
- Determine the remaining life of all supplies and order new ones.
- View and change the all-in-one or network configuration.
- View and print some internal pages.
- Select the language in which to display the EWS pages.

Download Free Service Manual and Resetter Printer at http://printer1.blogspot.com

Download Free Service Manual and Resetter Printer at http://printer1.blogspot.com

4 Theory of operation

- Basic operation
- Internal components (base unit)
- Engine control system
- Laser/scanner system
- Pickup/feed/delivery system
- Image-formation system
- Scanner and ADF functions and operation
- Fax functions and operation

Download Free Service Manual and Resetter Printer at http://printer1.blogspot.com

Basic operation

This chapter presents an overview of the relationships between major components in the all-in-one, and includes a detailed discussion of the image-formation system. The following systems are discussed:

- Engine control system
- Laser/scanner system
- Pickup/feed/delivery system
- Image-formation system

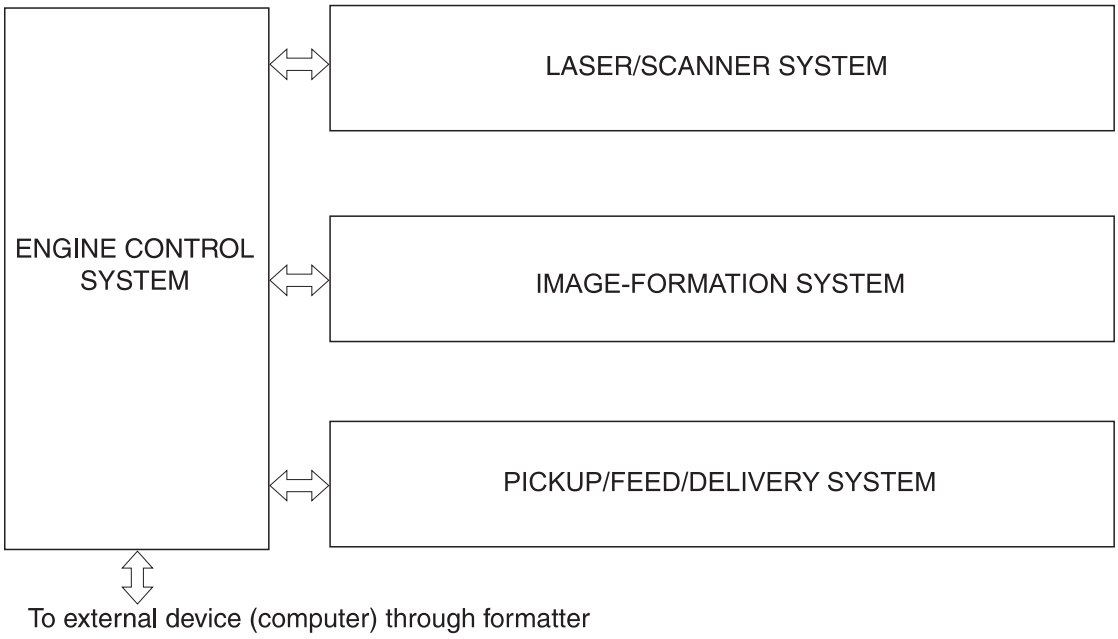

Figure 4-1 HP LaserJet 3390/3392 all-in-one system block diagram

Sequence of operation for the base unit

Operational sequences are controlled by the microprocessor and the DC controller.

Table 4-1 Sequence of operation

Name	Timing	Purpose
WAIT	From power-on until the end of the main-motor initial drive	Detects the presence of a print cartridge; clears potential from the drum surface and cleans the transfer roller See Table 4-2 Power-on sequence on page 85 for a complete description of the WAIT (power-on) period.
STBY (standby)	From the end of the WAIT or LSTR period until either a print command is sent from the formatter or the power is turned off	Prepares the all-in-one to receive print commands
INTR (initial rotation)	From the time of the print command until the pickup solenoid is turned on	Prepares the photosensitive drum for printing

Download Free Service Manual and Resetter Printer at http://printer1.blogspot.com

Table 4-1 Sequence of operation (continued)

Name	Timing	Purpose
PRINT	From the end of the INTR period until the primary high-voltage is turned off	Forms the image on the photosensitive drum and transfers the toner image to the media
LSTR (last rotation)	From the end of the PRINT period (when high-voltage is turned off) until the main motor stops rotating	Delivers the last page of a print job After LSTR, the all-in-one either returns to STBY or, if another print command was sent from the formatter, enters INTR

Table 4-2 Power-on sequence

Step	Action
1	Power-on
2	CPU initialization
3	Start video interface communication
4	Check sensors for residual media
5	Main motor initial drive
6	Fuser heater initial drive. The fuser heater reaches a surface temperature of 100 degrees C.
7	Laser/scanner motor initial drive
8	High-voltage control Detect presence of a print cartridge Clean the transfer roller after the primary charging ac bias is turned on
9	Failure/abnormality check: detect laser/scanner failure, fuser failure, and open covers
10	Communication with the memory tag

Download Free Service Manual and Resetter Printer at http://printer1.blogspot.com

Internal components (base unit)

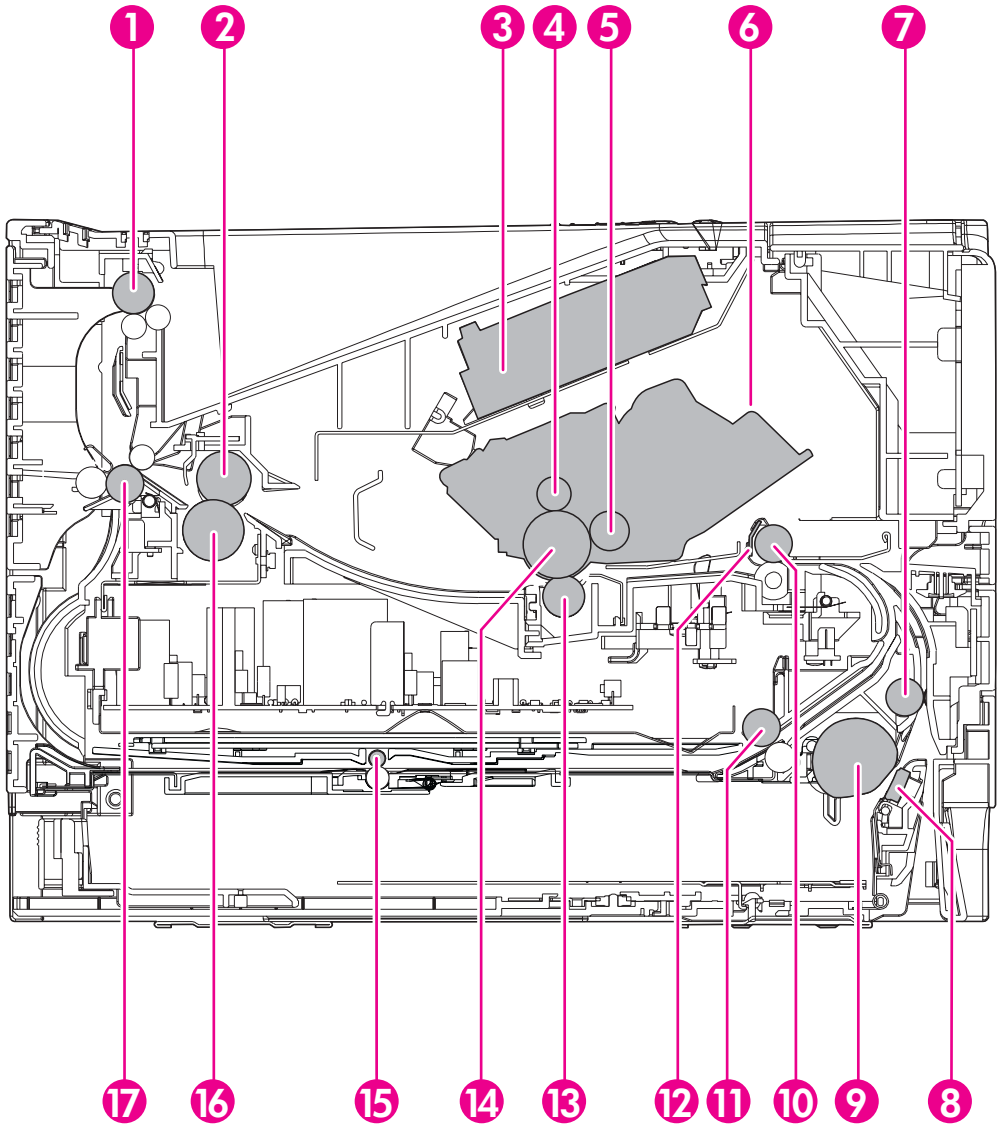

Figure 4-2 Internal components (base unit)

1	Top output bin delivery roller
2	Fuser film
3	Laser/scanner
4	Primary charging roller
5	Developing cylinder
6	Print cartridge
7	Feed roller
8	Separation pad

Download Free Service Manual and Resetter Printer at http://printer1.blogspot.com

9	Pickup roller
10	Registration roller
11	Duplexer pickup roller
12	Registration shutter
13	Transfer roller
14	Photosensitive drum
15	Duplexer feed roller
16	Pressure roller
17	Rear output bin delivery roller

Download Free Service Manual and Resetter Printer at http://printer1.blogspot.com

Engine control system

The engine control system coordinates all of the all-in-one functions, according to commands sent from the formatter. It drives the laser/scanner system, the image-formation system, and the pickup/feed/delivery system.

The engine control system contains the following components:

- Formatter
- High-voltage PCA

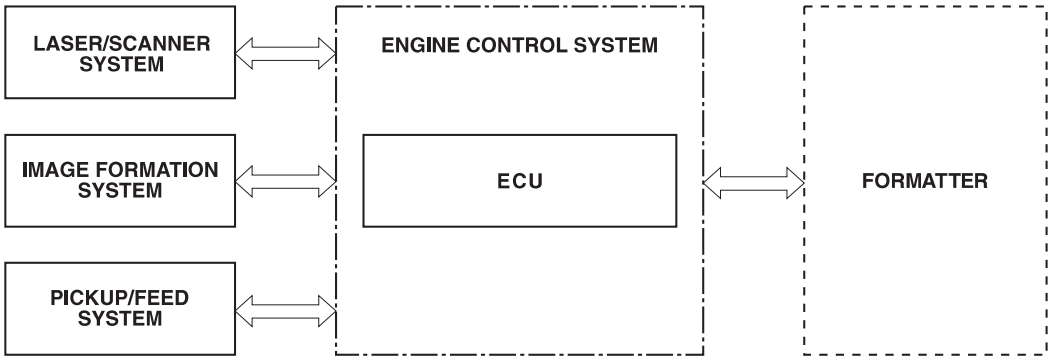

Figure 4-3 Engine control system

Download Free Service Manual and Resetter Printer at http://printer1.blogspot.com

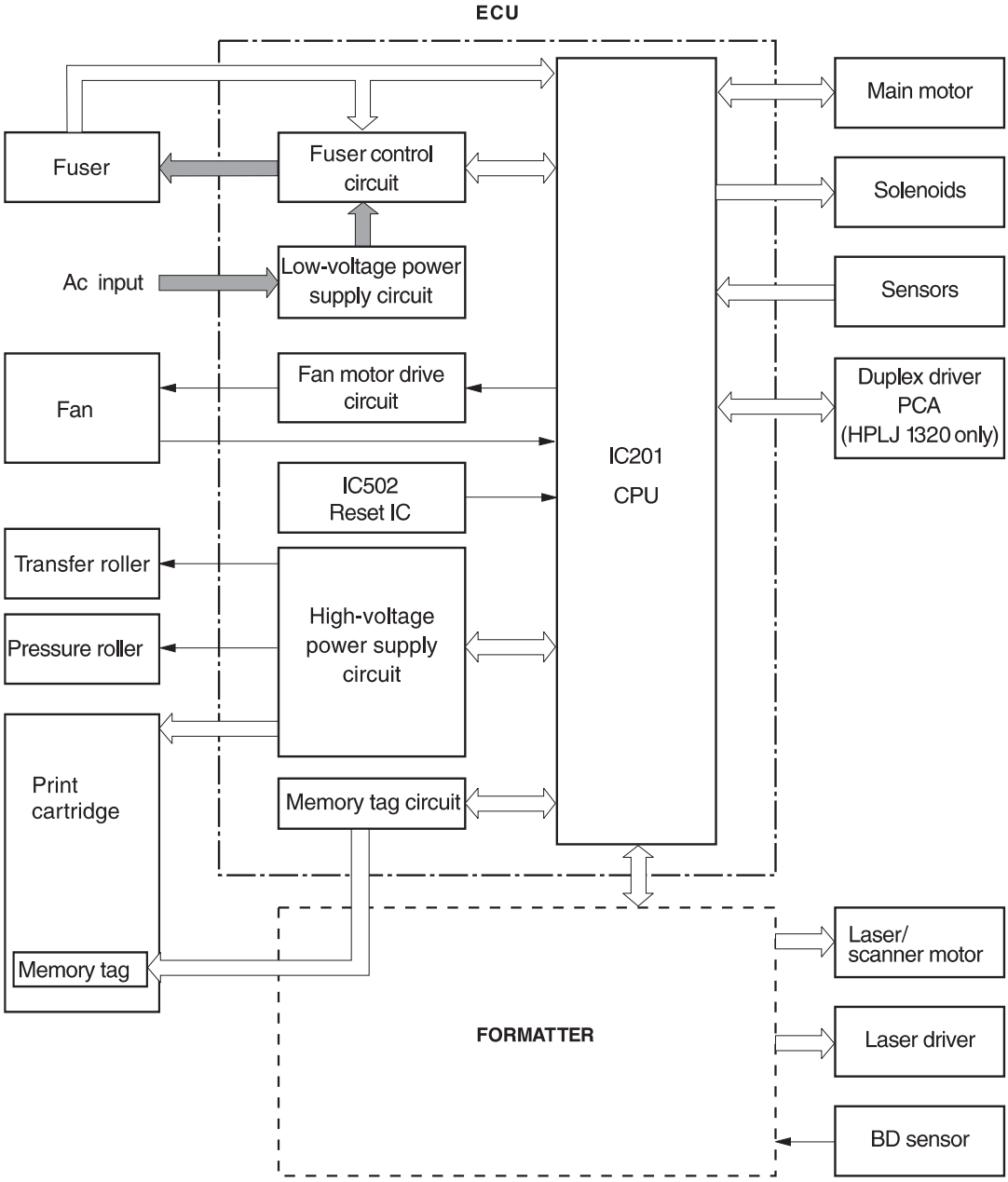

Figure 4-4 Engine-control-system circuit diagram

Download Free Service Manual and Resetter Printer at http://printer1.blogspot.com

Laser/scanner system

The laser/scanner system receives video signals from the dc controller and the formatter and converts the signals into latent images on the photosensitive drum.

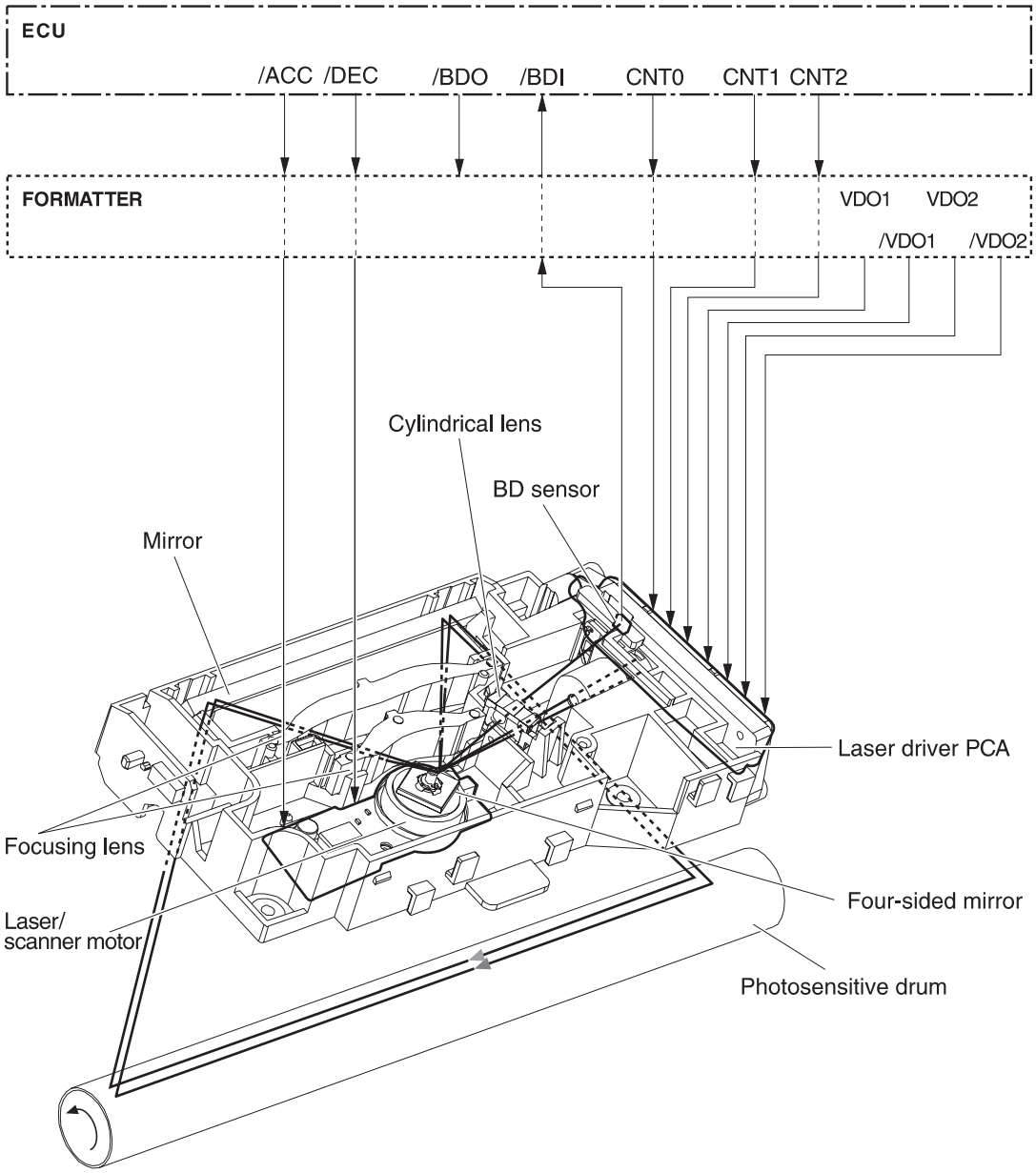

Figure 4-5 Laser/scanner system

Download Free Service Manual and Resetter Printer at http://printer1.blogspot.com

Pickup/feed/delivery system

The pickup/feed/delivery system consists of several types of feed rollers and sensors. The dc controller uses two motors and two solenoids to drive the rollers. Three media-detection sensors detect media as it passes through the all-in-one. If media does not reach or pass each sensor within a specified time period, the dc controller determines that a jam has occurred and alerts the formatter.

The following components are identified in Figure 4-6 Pickup/feed/delivery system on page 92:

- M1, main motor
- SL1, tray 2 pickup solenoid
- SL2, tray 1 pickup solenoid
- SL3, duplex solenoid
- PS911, tray 1 media sensor
- PS912, top-of-page sensor
- PS913, width-detection sensor
- PS914, tray 2 media sensor
- PS915, fuser delivery sensor
- PS915, duplex sensor

Download Free Service Manual and Resetter Printer at http://printer1.blogspot.com

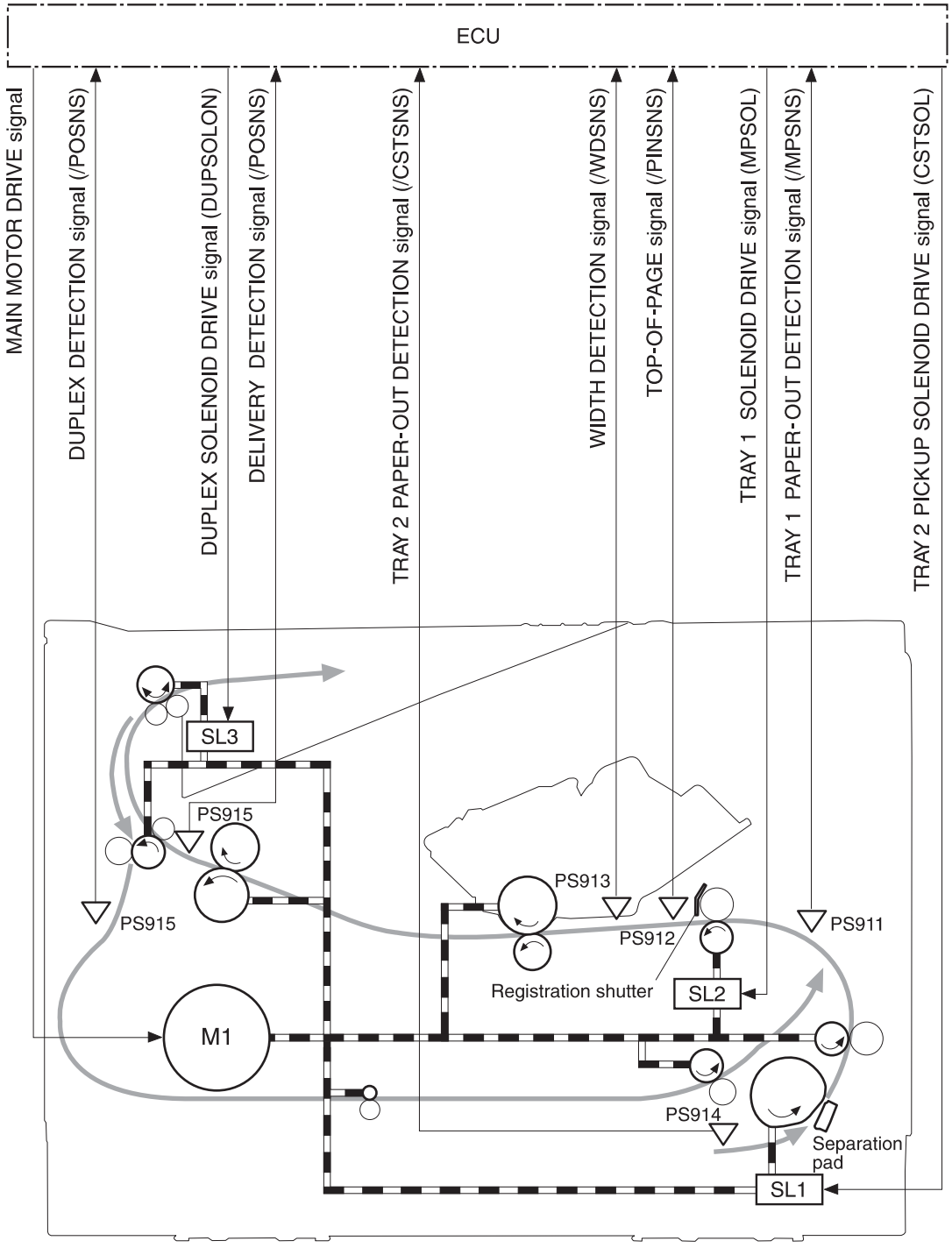

Figure 4-6 Pickup/feed/delivery system

Download Free Service Manual and Resetter Printer at http://printer1.blogspot.com

Image-formation system

Laser printing requires the interaction of several different technologies, including electronics, optics, and electrophotographics, to provide a printed page. Each process functions independently and must be coordinated with the other all-in-one processes. Image formation consists of the following five processes:

- Electrostatic latent-image formation
- Developing
- Transfer
- Fusing
- Drum cleaning

The five processes contain eight steps, which are shown in Figure 4-7 Image-formation system on page 93 and described in the following sections.

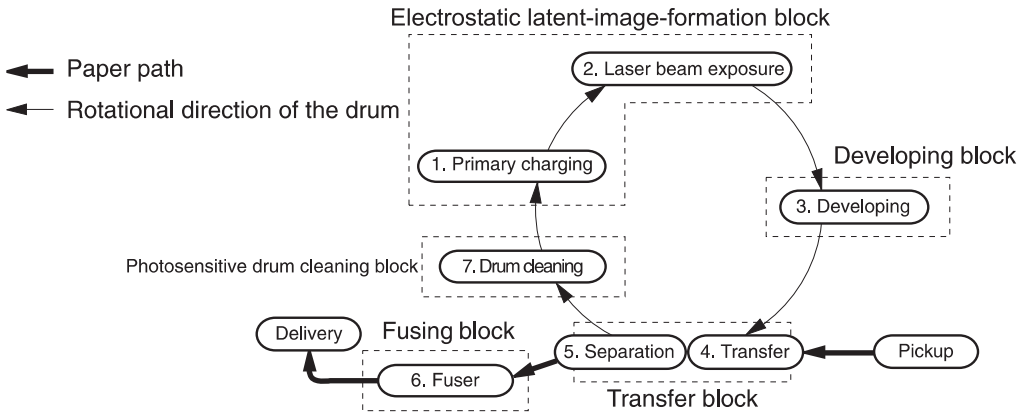

Figure 4-7 Image-formation system

Step 1: Primary charging

Dc and ac biases are applied to the primary charging roller, which transfers a uniform negative potential to the photosensitive drum.

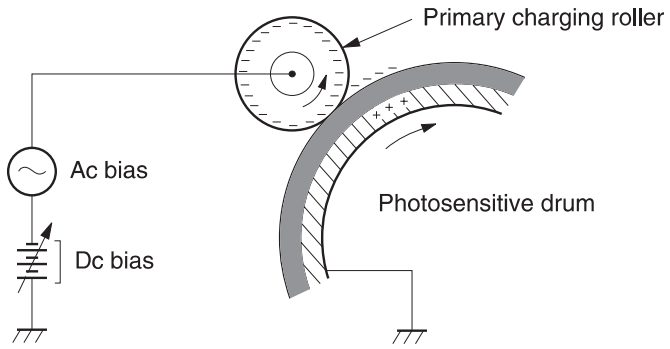

Figure 4-8 Primary charging

Step 2: Laser beam exposure

Download Free Service Manual and Resetter Printer at http://printer1.blogspot.com

The laser beam scans the photosensitive drum to neutralize negative charges on parts of the drum. An electrostatic latent image is formed on the drum where negative charges were neutralized.

Step 3: Developing

The developing cylinder comes in contact with the photosensitive drum to deposit toner onto the electrostatic latent image.

NOTE The charges on the exposed area of the drum are shown as positive in Figure 4-9 Developing on page 94. The charges are actually negative, but they are more positive than the charges on the developing cylinder.

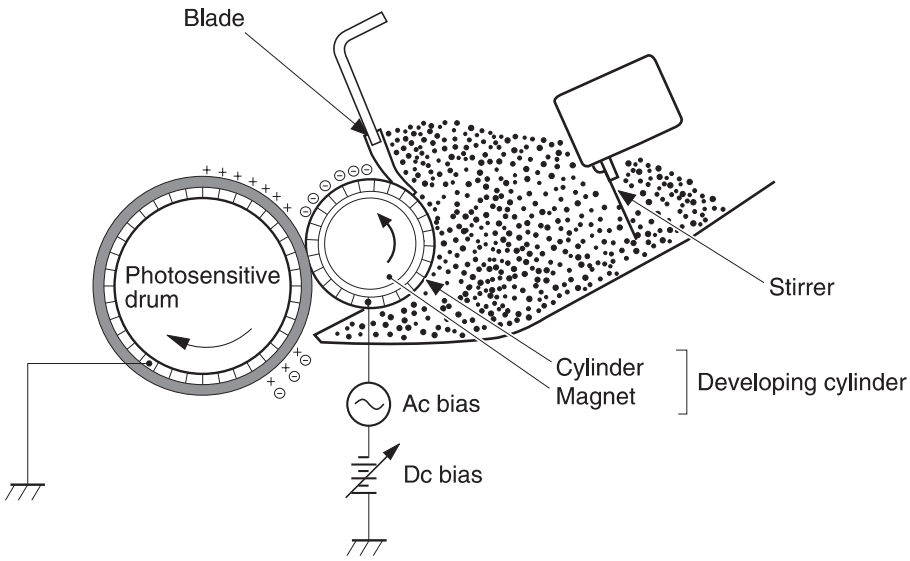

Figure 4-9 Developing

Toner acquires a negative charge through friction from the developing cylinder and the blade. When the negatively charged toner comes in contact with the drum, the toner adheres to the electrostatic latent image. The image on the drum becomes visible because of the toner.

Step 4: Transfer

The transfer charging roller, to which a dc positive bias is applied, imparts a positive charge on the print media. When the print media comes in contact with the photosensitive drum, the toner is transferred to the print media.

Download Free Service Manual and Resetter Printer at http://printer1.blogspot.com

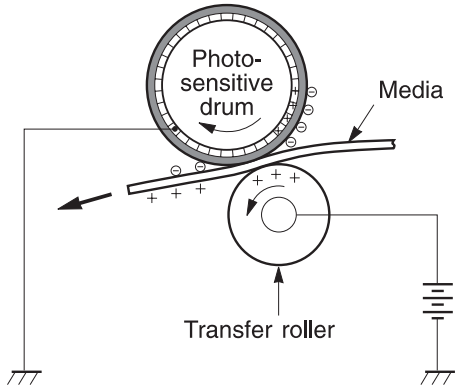

Figure 4-10 Transfer

Step 5: Separation

The elasticity of the print media causes its separation from the photosensitive drum. A static-charge eliminator aids separation by weakening any electrostatic adhesion.

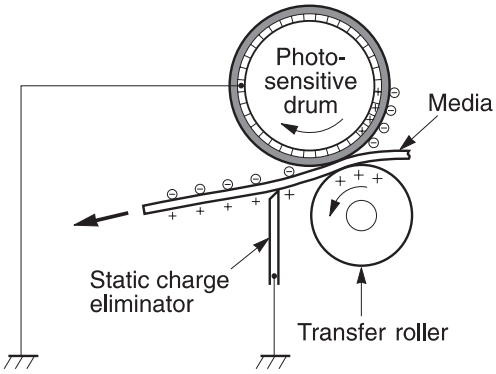

Figure 4-11 Separation

Step 6: Fusing

The dc negative bias applied to the fusing film strengthens the holding force of the toner on the print media and prevents the toner from scattering.

Download Free Service Manual and Resetter Printer at http://printer1.blogspot.com

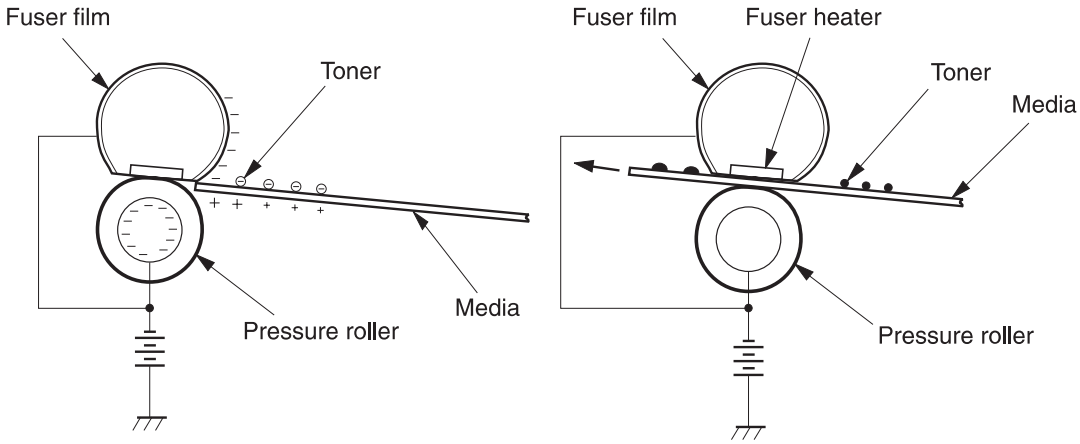

Figure 4-12 Fusing

Step 7: Drum cleaning

The cleaning blade scrapes the residual toner off of the photosensitive drum and deposits it into the waste toner case.

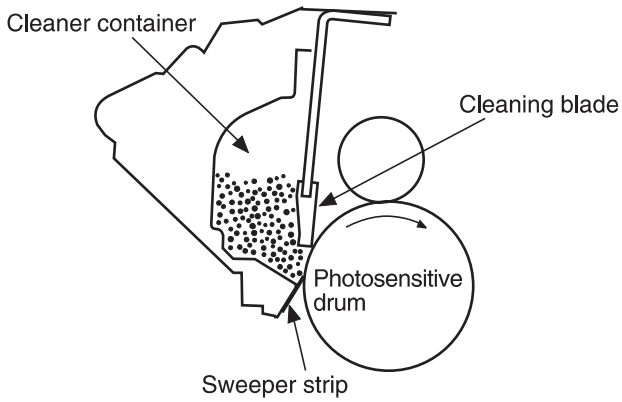

Figure 4-13 Drum cleaning

Download Free Service Manual and Resetter Printer at http://printer1.blogspot.com

Scanner and ADF functions and operation

The following sections describe how the document scanner and the automatic document feeder (ADF) function.

Scanner functions

The scanner uses a light source, a color-separation method, and a charge-coupled device array (CCD) to collect optical information about the document and transform that into an image file. The scanner consists of these elements:

- A lamp (cold-cathode fluorescent lamp)
- Five mirrors and a lens
- A CCD

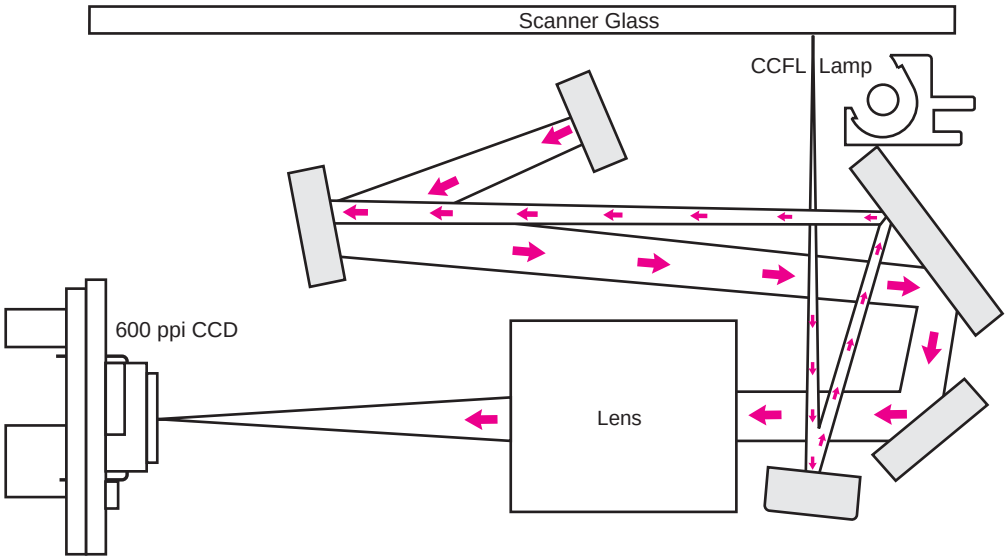

Figure 4-14 Optical system

The scanner lamp illuminates a small strip of the document (called the *raster line*). The mirrors direct the light through the lens to the CCD. The CCD senses and records the light, creating an analog representation of the raster line. If the ADF is being used, the document then advances in the ADF to the next raster line. If the flatbed is being used, the scanner module advances to the next raster line. This advancing and collection process continues to the end of the sheet.

The image data is collected in the motor controller board, where it is processed and sent to the formatter. The formatter then handles the image data, outputting it as a copy, sending it through the LIU as a fax , or directing it to the computer as scanner output.

The image data collected is 600 pixels per inch (ppi). Each pixel has 8 bits for each of the three colors (256 gray scale levels for each color), or a total of 24 bits per pixel (24-bit color).

Scanner operation

At power-on and periodically at other times, the scanner assembly moves systematically to locate its home position. It then calibrates to a white strip located under the glass at the right end of the scan tub.

Download Free Service Manual and Resetter Printer at http://printer1.blogspot.com

If the all-in-one detects a document in the ADF when a copy or scan is initiated (from the software or the control panel), the scan module moves to the left side of the scan tub and stops. The image is acquired as the paper is fed through the ADF past the scanner module.

If no document is detected in the ADF, or if the model does not have an ADF, the scan module acquires the image from the flatbed glass while slowly moving within the scan tub.

ADF operation

Standby (paper-loading) mode: In standby mode, the pickup roller is up and the stack-stop is down, preventing the user from inserting the original document too far. When a document is inserted correctly, the paper-present sensor detects its presence.

The standard operation of the ADF consists of the pick, feed, and lift steps.

Pick: When it receives a copy or scan command, the ADF motor engages the gear train to lower the pickup-roller assembly and raise the stack-stop. The first roller, called the pre-pick roller, moves the top few sheets forward into the ADF. The next roller is the pickup roller. This roller contacts the ADF separation pad, which separates multiple pages into single sheets.

Feed: The single sheet continues through the path. Along the way, the form sensor, which is a set distance from the ADF glass, detects the sheet. This alerts the scanner to start when the page reaches the glass. The scanner acquires the image, one raster line at a time, until it detects the end of the page. The page is then ejected. The pick and feed steps are repeated as long as paper is detected in the ADF input tray.

Lift: When no more paper is detected in the ADF input tray and the form sensor detects the trailing edge of the last page, the last sheet is ejected and the motor turns in a sequence that lifts the pick roller assembly to standby (paper-loading) mode again.

The ADF will not function when the ADF cover is open. The paper path is incomplete if the ADF cover is lifted from the glass.

ADF paper path and ADF sensors

The following diagram shows the ADF paper path.

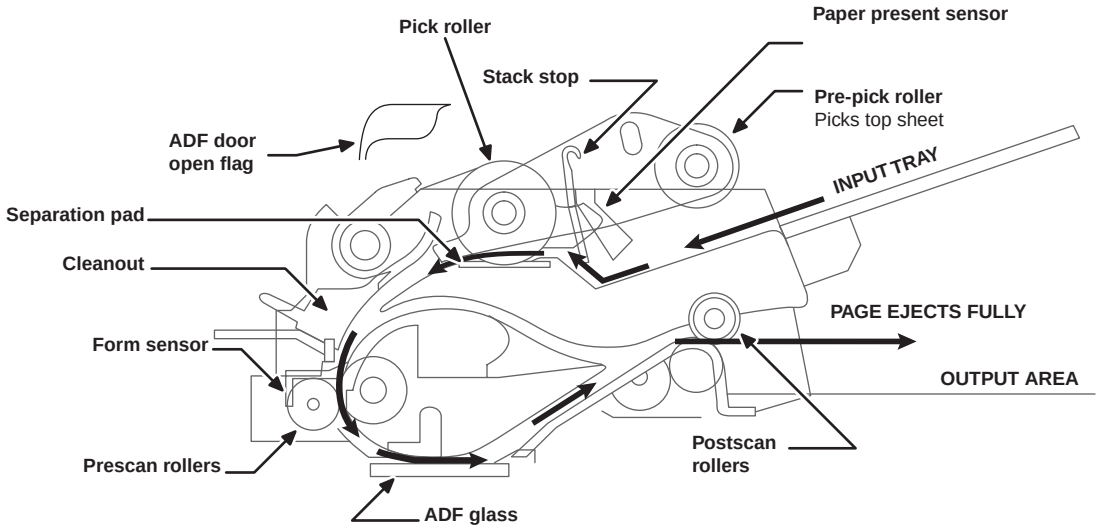

Figure 4-15 ADF paper path

Download Free Service Manual and Resetter Printer at http://printer1.blogspot.com

The paper-present sensor determines if paper is in the ADF. The form sensor detects the top and bottom edges of the document. One other sensor detects an open ADF door.

ADF jam detection

The ADF has two sensors that detect paper. The paper-present sensor detects the presence of media in the ADF input tray. The form sensor detects media moving through the ADF. If a jam is detected, the ADF immediately stops the paper feeding and a jam message appears on the control-panel display.

A jam can be detected under any of the following conditions:

- **Document-feeder jam** When documents are detected in the ADF input tray, and a command to copy, scan or fax is received, the scan module travels to the left side of the scan assembly and stops beneath the ADF scanner glass. The ADF then attempts three times, or for about ten seconds, to advance the paper to the form sensor. If the paper does not advance, the scan module travels back to the home position on the right side of the scanner assembly. The message **Document feeder mispick. Reload.** appears on the control-panel display.
- **Long-document jam** If the paper has advanced to trigger the form sensor, but the trailing edge is not detected within the time allowed for a 381-mm (15-inch) document (the maximum allowable page length for the ADF), the scanner returns to the home position at the right side of the scanner assembly. The message **Doc feeder jam. Clear, Reload.** appears on the control-panel display.
- **Stall jam** When a page that is less than 381 mm (15 inches) long has advanced to the form sensor but has not left it within the expected time, the paper has probably stalled or jammed. The scanner returns to the home position at the right side of the scanner assembly. The message **Doc feeder jam. Clear, Reload.** appears on the control-panel display.
- **Other** If the paper stops in the ADF and the scan module remains under the ADF scanner glass, an internal firmware error has probably occurred. This is usually remedied by cycling the power.

Download Free Service Manual and Resetter Printer at http://printer1.blogspot.com

Fax functions and operation

The following sections describe the all-in-one fax capabilities.

PSTN operation

The public switched telephone network (PSTN) operates through a central office (CO) that generates a constant voltage on the TIP and RING wires (48 V, usually). A device goes on-hook by connecting impedance (such as 600 ohms for the U.S.) across the TIP and RING so that a line current can flow. The CO can detect this current and can send impulses like dial tones. The all-in-one generates more signaling tones, such as dialing digits, to tell the CO how to connect the call. The all-in-one can also detect tones, such as a busy tone from the CO, that tell it how to behave.

When the call is finally connected, the CO behaves like a piece of wire connecting the sender and receiver. This is the period during which all of the fax signaling and data transfer occurs. When a call is completed, the circuit opens again and the line-current flow ceases, removing the CO connection from both the sender and the receiver.

On most phone systems, the TIP and RING wires appear on pins 3 and 4 of the RJ-11 modular jack (the one on the LIU). These two wires do not have to be polarized because all the equipment works with either TIP or RING on pin 3 and the other wire on pin 4. This means that cables of either polarity can interconnect and will still work.

These basic functions of PSTN operation are assumed in the design of the fax subsystem. The all-in-one generates and detects the signaling tones, currents, and data signals that are required to transmit and receive faxes on the PSTN.

To receive faxes when you hear fax tones

In general, incoming faxes to the all-in-one are automatically received. However, if other devices are connected to the same phone line, the all-in-one might not be set to answer automatically.

If the all-in-one is connected to a phone line that receives both fax and phone calls, and you hear fax tones when you answer the extension phone, receive the fax in one of two ways:

- If you are near the all-in-one, press Start Fax on the control panel.
- Press 1-2-3 in sequence on the extension phone keypad, listen for fax transmission sounds, and then hang up.

NOTE In order for the 1-2-3 sequence to work, the extension phone setting must be set to **On** in the **Fax setup** menu.

Distinctive ring function

Distinctive ring is a service that a telephone company provides. The distinctive ring service allows three phone numbers to be assigned to one phone line. Each phone number has a distinctive ring. The first phone number has a single ring, the second phone number has a double ring, and the third phone number has a triple ring.

If the distinctive ring service is used, the fax phone number should be the phone number that uses the double or triple ring.

Download Free Service Manual and Resetter Printer at http://printer1.blogspot.com

NOTE The all-in-one has not been tested with all of the distinctive-ring services that telephone companies provide in all countries/regions. HP does not guarantee that the distinctive-ring function will operate correctly in all countries/regions.

Set up the distinctive ring function

1. Press Menu. Use the < or > button to scroll to **Fax setup** and then press ✔.
2. Use the < or > button to scroll to **Fax recv. setup** and then press ✔.
3. Use the < or > button to scroll to **Fax recv. setup Answer ring type** and then press ✔.
4. Use the < or > button to scroll to one of the following options:
   - **All rings** (default setting)
   - **Single**
   - **Double**
   - **Triple**
   - **DoubleTriple**

   Press ✔ to save the setting.

The fax subsystem

The formatter, LIU, firmware, and software all contribute to the fax functionality. The designs of the formatter and LIU, along with parameters in the firmware, determine the majority of the regulatory requirements for telephony on the all-in-one.

The fax subsystem is designed to support V.34 fax transmission, lower speeds (such as V.17 fax), and older fax machines.

Formatter in the fax subsystem

The formatter contains the modem chipset (DSP and CODEC) that controls the basic fax functions of tone generation and detection, along with channel control for the fax transmissions.

The CODEC and its associated circuitry act to control transmit and receive gains, and to compensate for transmission signal coupling into the receive channel. The formatter also contains circuitry that adds termination impedance to help match the telephone network impedance.

LIU in the fax subsystem

Two versions of the LIU are used in the HP LaserJet 3390/3392 all-in-one. One is used in the North American, South American, and Asian countries/regions. The other is used primarily in European countries/regions.

The following are features that are different in the European version:

- A different voltage-protection device
- Current limiting of the dc current

Download Free Service Manual and Resetter Printer at http://printer1.blogspot.com

- Filtering for the countries/regions that use billing or metering tones
- Control of the impedance of the dc circuit through the SHUNT signal

Because the TIP and RING are not polarized, all LIU circuitry that connects to TIP and RING is bidirectional. The LIU operates identically when TIP and RING are reversed.

Safety isolation

The most important function of the LIU is the safety isolation between the high-voltage, transient-prone environment of the telephone network (TNV [telephone network voltage]) and the low-voltage analog and digital circuitry of the formatter (SELV [secondary extra-low voltage]). This safety isolation provides both customer safety and all-in-one reliability in the telecom environment.

Any signals that cross the isolation barrier do so either optically or magnetically. The breakdown voltage rating of barrier-critical components is greater than 1.5 kV.

Safety-protection circuitry

In addition to the safety barrier, the LIU protects against RING and over-current events.

Telephone over-voltages can be either differential mode or common mode. The RING can be transient in nature (a lightning-induced surge or ESD) or continuous (a power line crossed with a phone line). The LIU protection circuitry provides margin against combinations of RING events.

Common mode protection is provided by the selection of high-voltage-barrier critical components (transformer, relay, and optoisolators). The safety barrier of the LIU PCB traces and the clearance between the LIU and surrounding components also contribute to common mode protection.

A voltage suppressor (a crowbar-type SIDACTOR) provides differential protection. This device becomes low impedance at approximately 300 V differential, and crowbars to a low voltage. A series thermal switch works in conjunction with the crowbar for continuous RING events, such as crossed power lines.

When the differential RING is continuous, the resulting over-current causes the thermal switch to become high impedance, disconnecting RING from the network and protecting the crowbar from thermal overload. The thermal switch automatically resets to low impedance after the over-current condition is removed, reconnecting RING to the network.

Data path

The magnetically coupled signals that cross the isolation barrier go either through a transformer or a relay. The TIP and RING signals use a transformer to cross the isolation barrier.

TIP and RING are the two-wire paths for all signals from the telephone network. All signaling and data information comes across them, including fax tones and fax data.

The telephone network uses dc current to determine the hook state of the telephone, so line current must be present during a call. On some line interfaces this current flows through the transformer, but on the LIU, a capacitor blocks the current from going into the transformer.

Blocking the current with a capacitor prevents the core of the transformer from being saturated by the high dc voltage, which can affect the ac signal quality. Rather than permitting the current to flow through the transformer, this LIU directs the current through another circuit called a gyrator or dc hold circuit. This creates the path for the central office-current flow when a call is in progress.

Download Free Service Manual and Resetter Printer at http://printer1.blogspot.com

Hook state

Another magnetically coupled signal is the control signal that disconnects the downstream telephone devices (such as a phone or answering machine). A control signal originating on the formatter can change the relay state, causing the auxiliary jack (downstream jack) to be disconnected from the circuit.

The all-in-one takes control of calls that it recognizes as fax calls. If the all-in-one does not directly pick up the call, it monitors incoming calls for the fax tone or for the user to direct it to receive a fax. This idle mode is also called eavesdropping. This mode is active when the all-in-one is on-hook but current exists in the downstream phone line because another device is off-hook. During eavesdropping, the receive circuit is enabled but has a different gain from the current that is generated during normal fax transmissions.

The all-in-one does not take control of the line unless it detects a fax tone or the operator tells it to connect manually. This feature allows the user to make voice calls from a phone that is connected to the all-in-one without being cut off if a fax is received.

Downstream current detection

The aux phone detect signal is optically coupled. This signal tells the firmware that an active phone (or modem or answering machine) is connected to the auxiliary port of the all-in-one (the right side of the RJ-11 jack).

A circuit that can detect current above a certain threshold generates the downstream-current-detection signal. The downstream current goes through a resistor, generating a voltage. If this voltage is above the threshold level, the signal changes state.

The downstream-current-detection signal is coupled back to the formatter through an optoisolator and across the safety isolation barrier. The firmware uses this signal to ensure that the all-in-one does not go off-hook (and disconnect a downstream call) until it has been authorized to do so (by a manual fax start or detection of the appropriate tones).

Hook switch control

Another optically coupled signal is the hook switch control. This signal from the formatter causes an optoisolator on the LIU to activate (making an open circuit into a short circuit). When shorted, the circuit is drawing dc current from the central office and is considered “on-hook.” When open, no dc current flows and the state is considered to be “off-hook.”

For pulse dialing, the optoisolator is toggled on and off with a particular timing sequence to generate pulses that the central offices of the telephone company recognizes as dialing digits.

Ring detect

Another optically coupled signal on the LIU is ring detect. Ring detect is a combination of voltage levels and cadence (time on and time off). Both must be present in order for the all-in-one to detect a valid ring.

The LIU works with the firmware to determine if an incoming signal is an answerable ring. When circuits on the LIU detect a ring voltage above a certain threshold, a corresponding signal is passed to the formatter to indicate that the ring is above the threshold. The firmware then measures the amount of time that the signal is high and low, and qualifies the cadence to determine whether it is a valid ring.

Line current control

The dc current from the CO needs to have a path to flow from TIP to RING. Because the current does not flow in the transformer, a path through some transistors and diodes (the dc hold circuit) acts like a

Download Free Service Manual and Resetter Printer at http://printer1.blogspot.com

simulated inductor (thus replacing the function of the transformer). This dc hold circuit is the main component of the voltage-current characteristic between TIP and RING.

Two other functions of this block of circuits are the current limit and the SHUNT for Europe. Current limit basically maintains a constant current from TIP to RING after the voltage reaches about 50 mA. Even if the voltage varies, the current will remain the same.

The SHUNT function changes the impedance (the current-voltage characteristic) during certain special events, such as pulse dialing and when the devices goes on-hook.

During such an event, the firmware tells the DSP on the formatter to activate SHUNT. A signal goes to the LIU through an optoisolator (optically coupled), which changes the state of some transistors so that the board has a linear current characteristic (normally, it is current-limited). Then more current can flow to the network, as required by these special events.

Billing (metering) tone filters

Switzerland and Germany provide high-frequency ac signals on the phone line in order to bill customers. The LC (inductor, capacitor) notch filters are provided on the European LIUs to prevent these billing signals from adversely affecting the data path and the dc hold circuit.

An additional filter in the cable (for certain countries/regions) can, in some cases, supplement these LC notch filters. Because these billings signals are not used in the U.S., these filters are not present on the U.S. LIU.

Fax page storage in flash memory

Fax pages are the electronic images of the document page. They can be created in any of three ways: scanned to be sent to another fax machine, generated to be sent by the computer, or received from a fax machine to be printed.

The all-in-one stores all fax pages in flash memory automatically. After these pages are written into flash memory they are stored until the pages are sent to another fax machine, printed on the all-in-one, transmitted to the computer, or erased by the user.

These pages are stored in flash memory, which is the nonvolatile memory that can be repeatedly read from, written to, and erased. The all-in-one has 4 MB of flash memory, of which 3.4 MB is available for fax storage. The remaining 0.6 MB is used for the file system and reclamation. Adding RAM does not affect the fax page storage because the all-in-one does not use RAM for storing fax pages.

Stored fax pages

The user can reprint stored fax pages in case of errors. The all-in-one will re-send stored fax pages after a busy signal, comm error, no answer, or power failure. Other fax devices store fax pages in either normal RAM or short-term RAM. Normal RAM immediately loses its data when power is lost, while short-term RAM loses its data about 60 minutes after power failure. Flash memory maintains its data for years without any applied power.

Advantages of flash memory storage

Fax pages that are stored in flash memory are persistent. They are not lost as a result of a power failure, no matter how long the power is off. Users can reprint faxes in case the print cartridge runs out of toner or the all-in-one experiences other errors while printing faxes.

The all-in-one also has scan-ahead functionality that makes use of flash memory. Scan-ahead automatically scans pages into flash memory before a fax job is sent. This allows the sender to pick up

Download Free Service Manual and Resetter Printer at http://printer1.blogspot.com

the original document immediately after it is scanned, eliminating the need to wait until the fax is transmission is complete.

Because fax pages are stored in flash memory rather than RAM, more RAM is available to handle larger and more complicated copy and print jobs.

Download Free Service Manual and Resetter Printer at http://printer1.blogspot.com

Download Free Service Manual and Resetter Printer at http://printer1.blogspot.com

5 Removal and replacement

- Introduction
- External panels, covers, and doors
- ADF assembly
- Scanner assembly
- Bezel and control panel
- Internal assemblies

Download Free Service Manual and Resetter Printer at http://printer1.blogspot.com

Introduction

This chapter documents removal and replacement of field replaceable units (FRUs) only.

Replacing FRUs is generally the reverse of removal. Occasionally, notes are included to provide directions for difficult or critical replacement procedures.

HP does not support repairing individual subassemblies or troubleshooting to the component level.

Removal and replacement strategy

WARNING! Turn the all-in-one off, wait 5 seconds, and then remove the power cord before attempting to service the all-in-one. If this warning is not followed, severe injury can result, as well as damage to the all-in-one. The power must be on for certain functional checks during troubleshooting. However, the power supply should be disconnected during parts removal.

Never operate or service the all-in-one with the protective cover removed from the laser/scanner assembly. The reflected beam, although invisible, can damage your eyes.

The sheet-metal parts can have sharp edges. Be careful when handling sheet-metal parts.

CAUTION Do not bend or fold the flat flexible cables (FFCs) during removal or installation. Also, do not straighten pre-folds in the FFCs. You *must* make sure that all FFCs are fully seated in their connectors. Failure to fully seat an FFC into a connector can cause a short circuit in a PCA.

NOTE To install a self-tapping screw, first turn it counterclockwise to align it with the existing thread pattern, and then carefully turn it clockwise to tighten. Do not overtighten. If a self-tapping screw-hole becomes stripped, repair the screw-hole or replace the affected assembly.

Electrostatic discharge

CAUTION Some parts are sensitive to electrostatic discharge (ESD). Look for the ESD reminder when removing all-in-one parts. Always perform service work at an ESD-protected workstation or mat. If an ESD workstation or mat is not available, ground yourself by touching the sheet-metal chassis *before* touching an ESD-sensitive part.

Protect the ESD-sensitive parts by placing them in ESD pouches when they are out of the all-in-one.

NOTE Note the length, diameter, color, type, and location of each screw. Be sure to return each screw to its original location during reassembly.

Incorrectly routed or loose wire harnesses can interfere with other internal components and can become damaged or broken. Frayed or pinched harness wires can be difficult to locate. When replacing wire harnesses, always use the provided wire loops, lance points, or wire-harness guides.

Download Free Service Manual and Resetter Printer at http://printer1.blogspot.com

User-replaceable parts

To remove and replace the all-in-one tray 2 pickup roller, the tray 2 or tray 3 separation pad, or the ADF pickup roller, see Replacing the tray 2 pickup roller on page 42, Replacing the tray 2 and optional tray 3 separation pad on page 47, or Replacing the ADF pickup-roller assembly on page 50.

Required tools

- #2 Phillips screwdriver with a magnetic tip and a 152-mm (6-inch) shaft length
- Small flatblade screwdriver
- Needle-nose pliers
- ESD mat (if one is available)
- Penlight (optional)

CAUTION Always use a Phillips screwdriver (callout 1). Do not use a pozidrive screwdriver (callout 2) or any motorized screwdriver. These can damage screws or screw threads.

CAUTION Do *not* pull directly on the wires to disconnect them. *Always* pull on the plastic body of a connector to avoid damaging the connector wires.

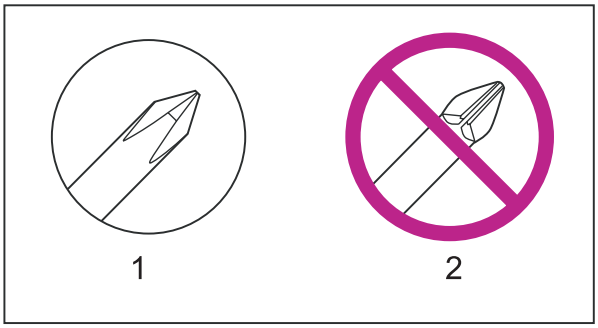

Figure 5-1 Phillips and pozidrive screwdriver comparison

Before performing service

- Remove all media.
- Unplug the power cable and interface cable(s).
- Place the all-in-one on an ESD mat (if one is available). If an ESD workstation or mat is not available, ground yourself by touching the sheet-metal chassis *before* touching an ESD-sensitive part.
- Remove the print cartridge.
- Remove the tray 2 cassette.
- Lift the all-in-one off of the optional tray 3 (if it is installed).

After performing service

- Return all media to the trays.
- Plug in the power cable.

Download Free Service Manual and Resetter Printer at http://printer1.blogspot.com

- Reinstall the print cartridge.
- Reinstall the tray 2 cassette.
- Replace the all-in-one on the optional tray 3 (if present).

Post-service tests

After service has been completed, the following tests can be used to verify that the repair or replacement was successful.

Test 1 (print-quality test)

1. Verify that you have completed the necessary reassembly steps.
2. Ensure that the input tray contains clean, unmarked paper.
3. Attach the power cord and interface cable, and then turn on the all-in-one.
4. Verify that the expected start-up sounds occur.
5. Perform a control-panel test from the secondary service menu. Verify that the control-panel buttons beep when they are pressed.

   NOTE If the control-panel buttons do not beep, verify that the user did not disable this function.

6. Print a Configuration page, and then verify that the expected printing sounds occur.
7. Print a Demo page, and then verify that the print quality is as expected.
8. Send a print job from the host computer, and then verify that the output meets expectations.
9. If necessary, restore any customer-specified settings.
10. Clean the outside of the all-in-one with a damp cloth.

Test 2 (copy-quality test)

1. Verify that you have completed the necessary reassembly steps.
2. Ensure that the input tray contains clean, unmarked paper.
3. Attach the power cord and interface cable, and then turn on the all-in-one.
4. Verify that the expected start-up sounds occur.
5. Print a Configuration page, and then verify that the expected printing sounds occur.
6. Place the Configuration page in the automatic document feeder (ADF).
7. Print a copy job, and then verify the results.
8. Place the Configuration page on the scanner glass.
9. Print a copy job, and then verify the results.
10. Clean the outside of the all-in-one with a damp cloth.

Download Free Service Manual and Resetter Printer at http://printer1.blogspot.com

Test 3 (fax-quality test)

1. Place the Configuration page in the ADF.
2. Type a valid fax number and send the fax job.
3. Verify that the send quality and receive quality meet expectations.

Download Free Service Manual and Resetter Printer at http://printer1.blogspot.com

Parts-removal order

Use the following diagram to determine which parts must be removed before removing other parts.

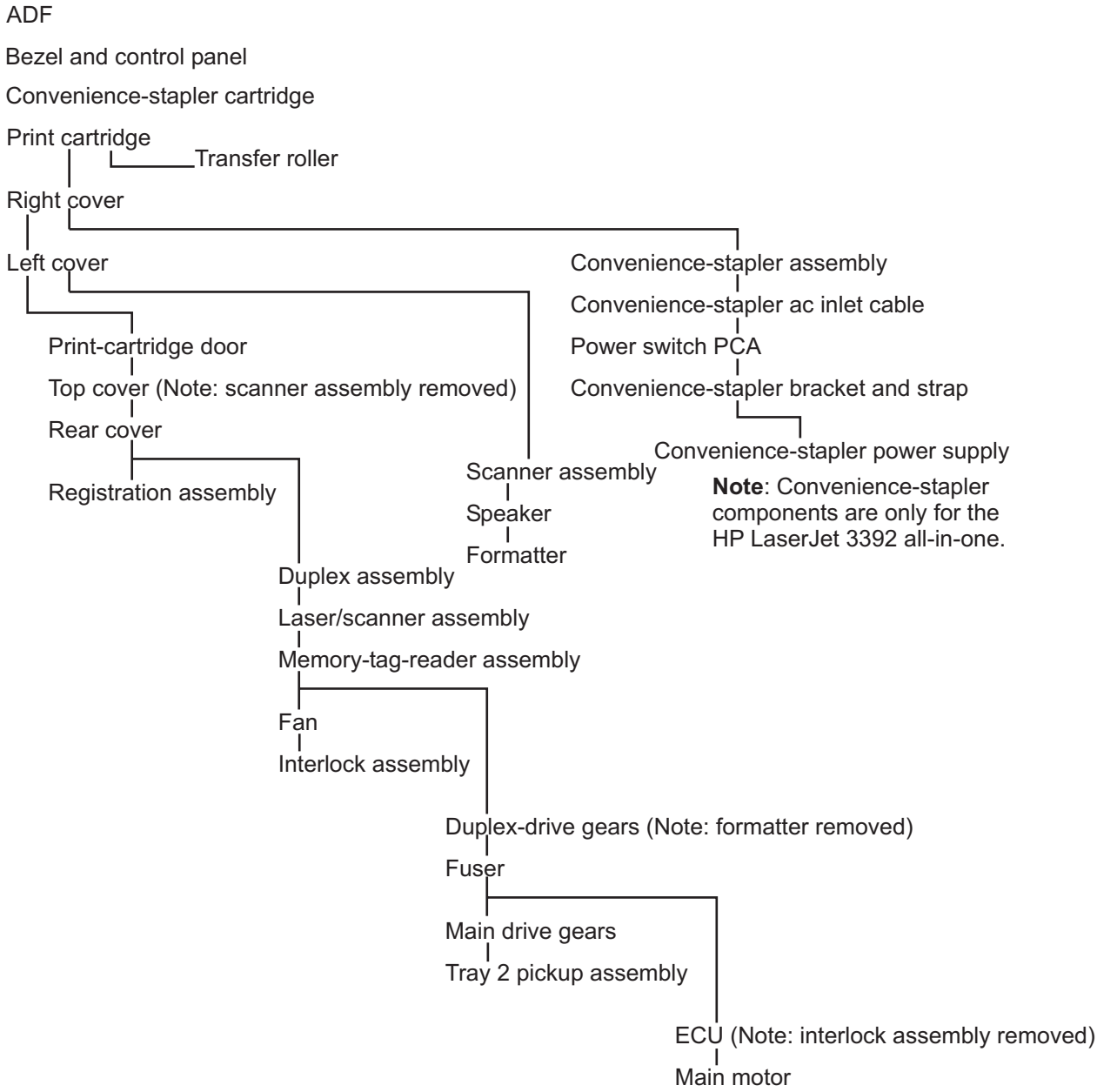

Figure 5-2 Parts-removal tree

Download Free Service Manual and Resetter Printer at http://printer1.blogspot.com

Remove the print cartridge

CAUTION If toner gets on your clothing, wipe it off with a dry cloth and wash the clothing in cold water. *Hot water sets toner into the fabric*.

1. Open the print-cartridge door.

Figure 5-3 Remove the print cartridge (1 of 2)

2. Grasp the print cartridge and remove it from the all-in-one.

Figure 5-4 Remove the print cartridge (2 of 2)

Download Free Service Manual and Resetter Printer at http://printer1.blogspot.com

External panels, covers, and doors

Right cover

1. Remove the staple cassette.

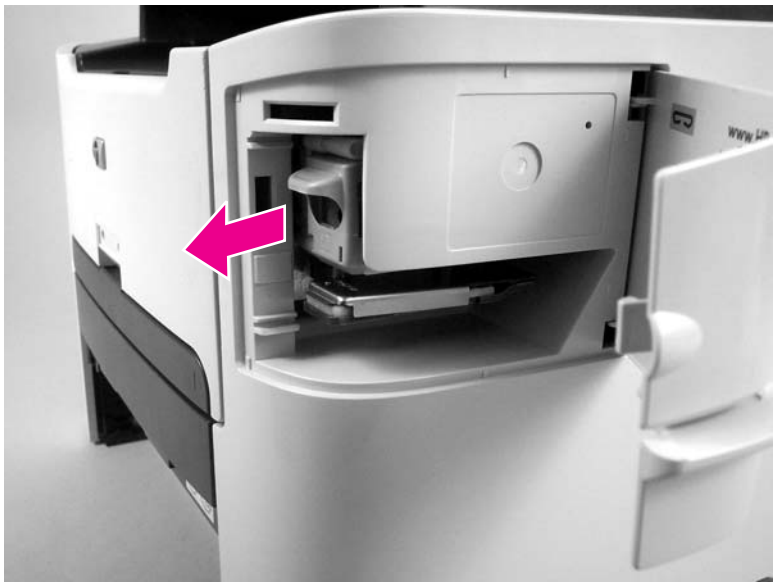

Figure 5-5 Remove the right cover (1 of 4)

2. Use a small flatblade screwdriver to release three tabs at the rear of the right cover.

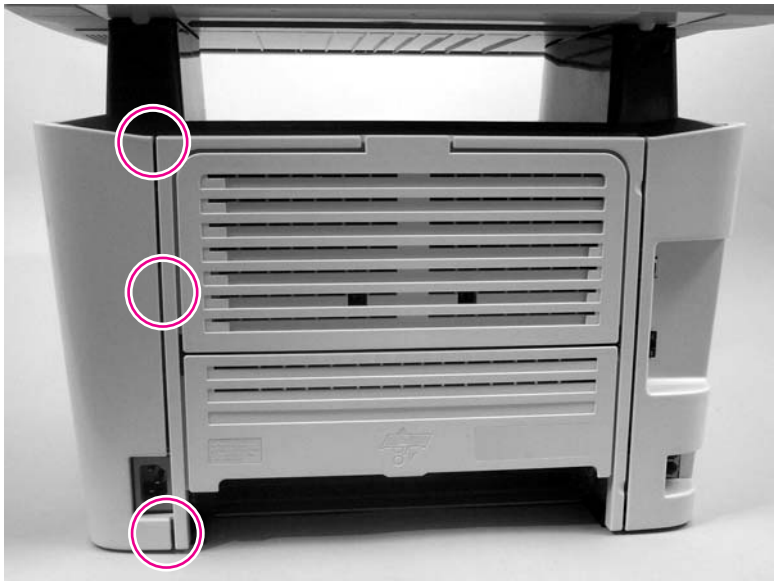

Figure 5-6 Remove the right cover (2 of 4)

Download Free Service Manual and Resetter Printer at http://printer1.blogspot.com

3. Release one tab at the bottom of the cover.

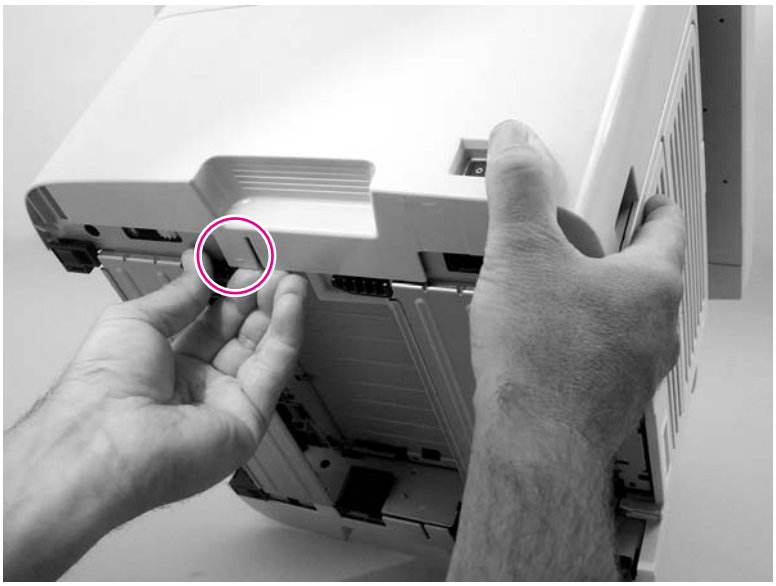

Figure 5-7 Remove the right cover (3 of 4)

4. Rotate the back of the cover away from the all-in-one, and then slide it forward to remove it

Figure 5-8 Remove the right cover (4 of 4)

Download Free Service Manual and Resetter Printer at http://printer1.blogspot.com

Left cover

1. Open the print-cartridge door and use a small flatblade screwdriver to release one tab at the front of the left cover.

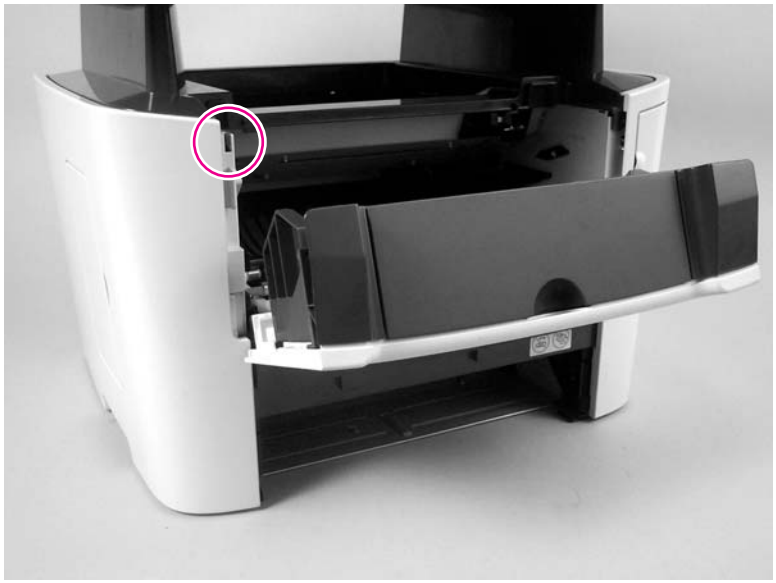

Figure 5-9 Remove the left cover (1 of 3)

2. Release one tab at the bottom of the cover.

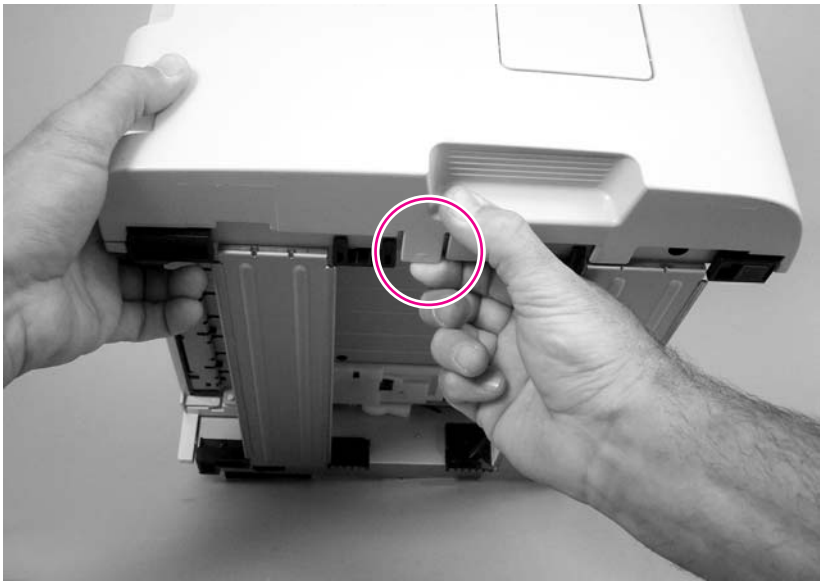

Figure 5-10 Remove the left cover (2 of 3)

Download Free Service Manual and Resetter Printer at http://printer1.blogspot.com

3. Rotate the front of the cover away from the all-in-one, and then slide it backwards to remove it

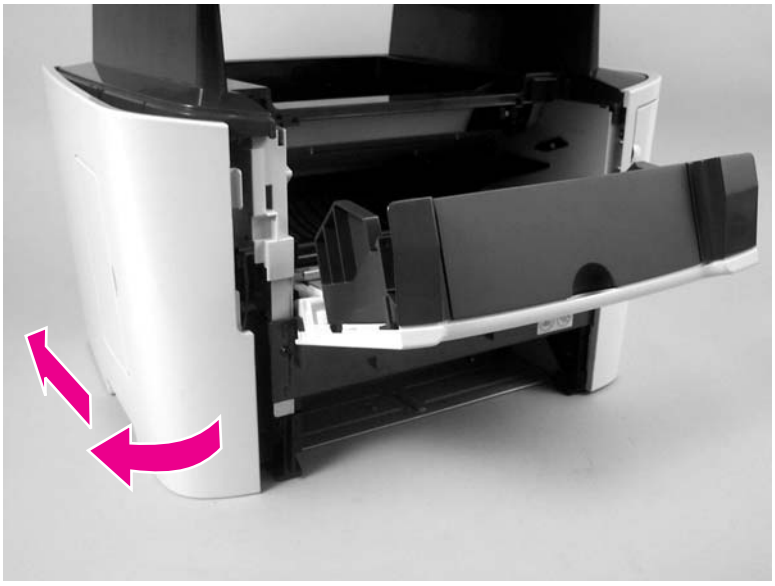

Figure 5-11 Remove the left cover (3 of 3)

Download Free Service Manual and Resetter Printer at http://printer1.blogspot.com

Print-cartridge door

1. Remove the following components.
   - Right cover. See Right cover on page 114.
   - Left cover. See Left cover on page 116.
2. Open the print cartridge door, and use a flatblade screwdriver to gently pry the cartridge-door arm (callout 1) off of the print-cartridge door.

   CAUTION Be careful not to break the tabs or the cartridge-door arm.

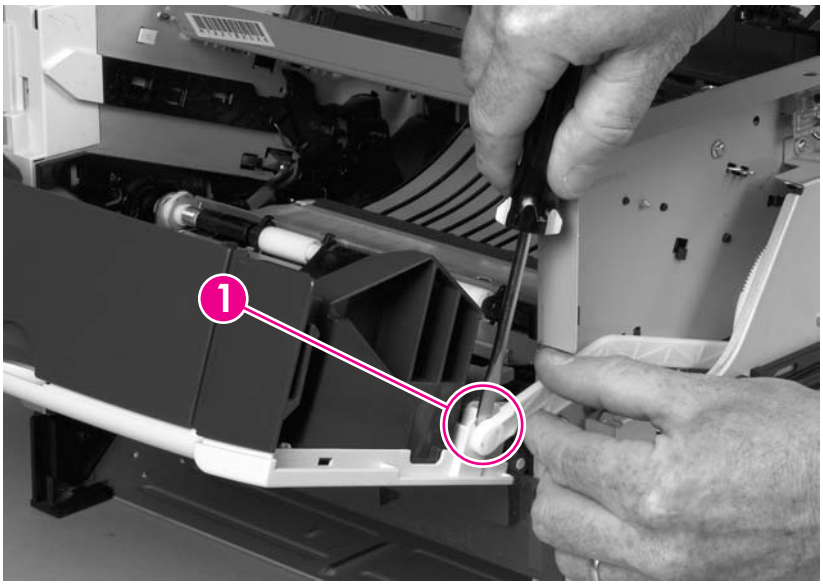

Figure 5-12 Removing the print-cartridge door (1 of 2)

Download Free Service Manual and Resetter Printer at http://printer1.blogspot.com

3. Close the print cartridge door and remove two screws (callout 2).

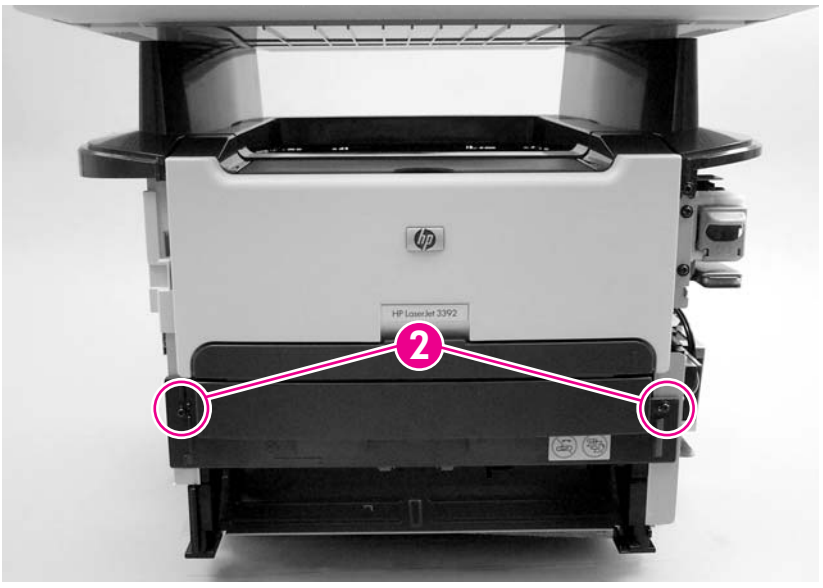

Figure 5-13 Removing the print-cartridge door (2 of 2)

4. Lift the cartridge-door assembly straight away from the all-in-one.

Hint make sure that the priority input slot (tray 1) countermeasure clip is seated correctly in front of the hinge.

Download Free Service Manual and Resetter Printer at http://printer1.blogspot.com

Rear cover

1. Remove the following components.
   - Right cover. See Right cover on page 114.
   - Left cover. See Left cover on page 116.
2. Remove four screws (callout 1).

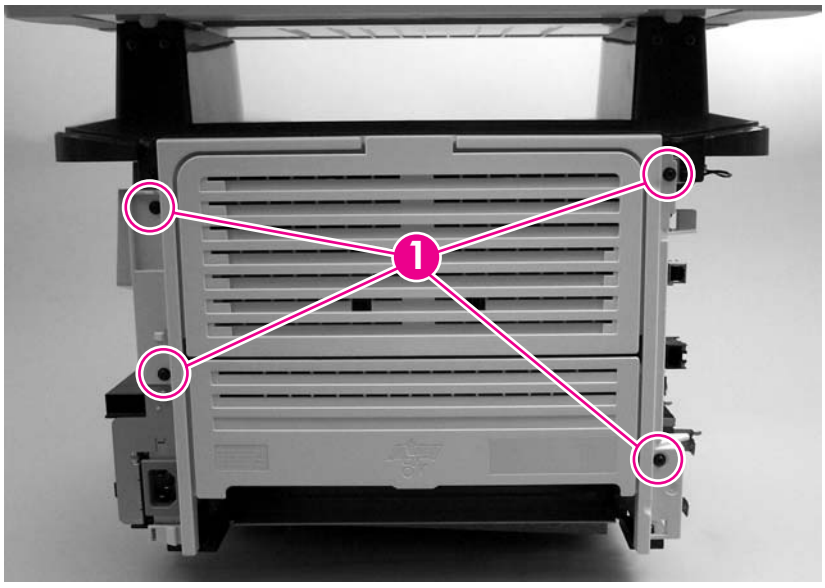

Figure 5-14 Remove the rear cover (1 of 2)

Hint When the rear cover is reinstalled, make sure that the fuser exit sensor flag is positioned in the opening in the cover.

Download Free Service Manual and Resetter Printer at http://printer1.blogspot.com

3. Use a small flatblade screwdriver to release the duplex-drive assembly hinge (callout 2) at the power-plug side of the assembly and separate the rear cover from the all-in-one to remove it.

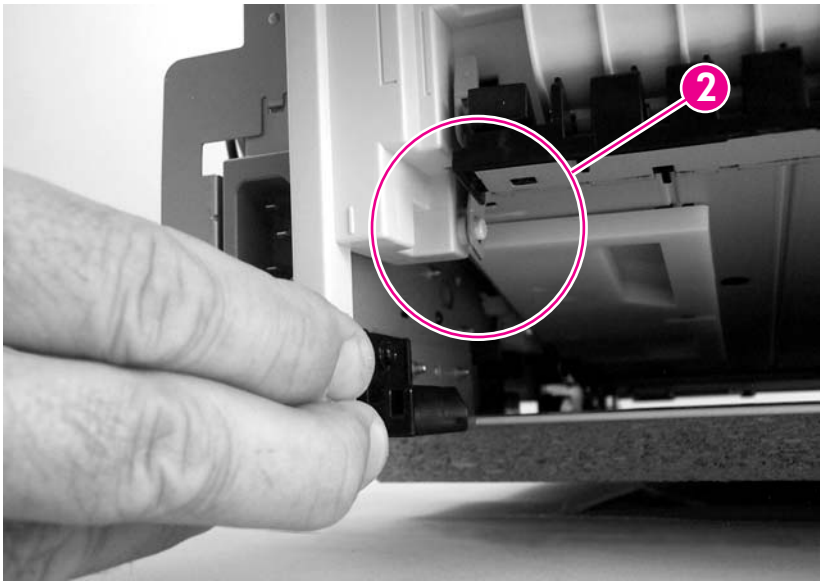

Figure 5-15 Remove the rear cover (2 of 2)

Download Free Service Manual and Resetter Printer at http://printer1.blogspot.com

Top cover

1. Remove the following components.
   - Right cover. See Right cover on page 114.
   - Left cover. See Left cover on page 116.
   - Scanner assembly. See Scanner assembly on page 126.
2. Open the print cartridge door and loosen but do not remove two screws (callout 1).

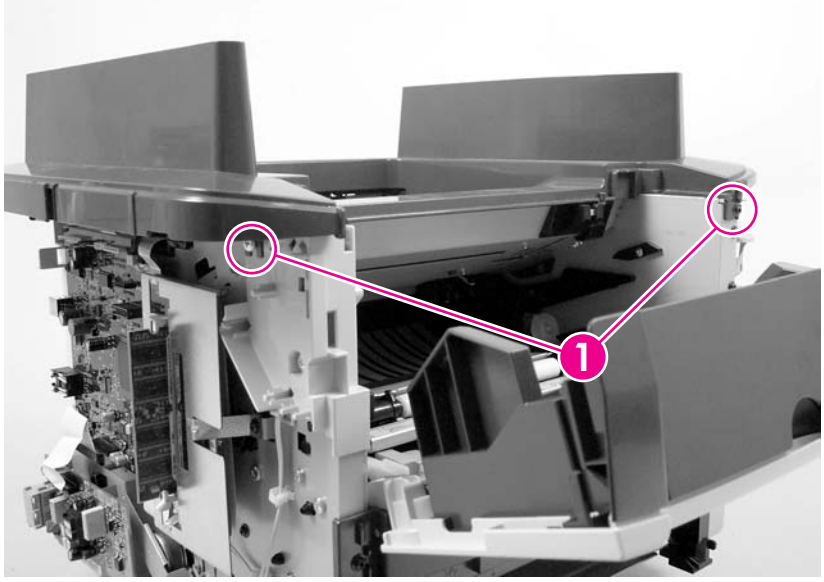

Figure 5-16 Remove the top cover (1 of 3)

3. Remove two screws (callout 2).

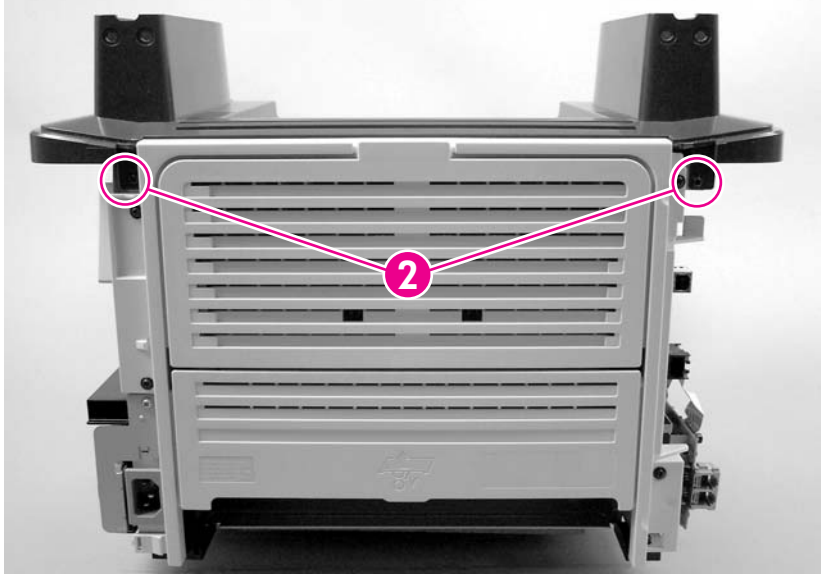

Figure 5-17 Remove the top cover (2 of 3)

Download Free Service Manual and Resetter Printer at http://printer1.blogspot.com

4. Remove four screws (callout 3), and then lift up on the top cover (callout 4) to remove it.

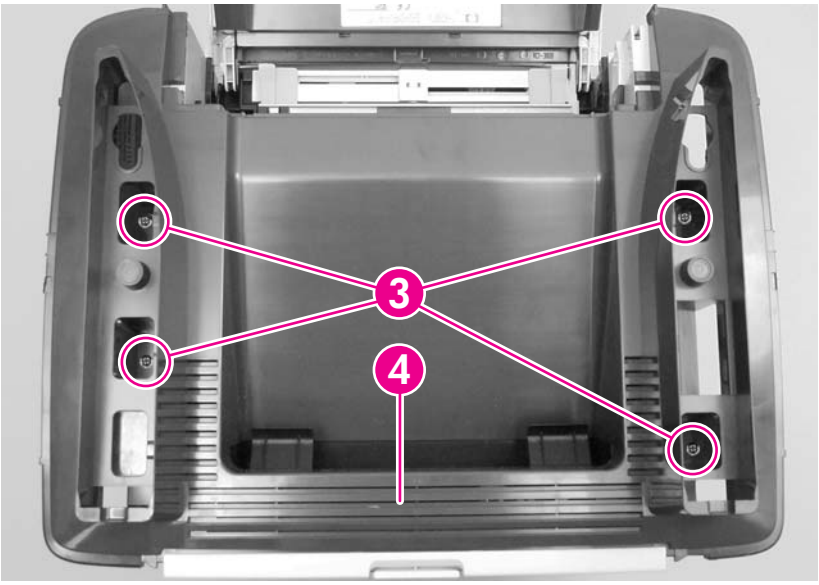

Figure 5-18 Remove the top cover (3 of 3)

Download Free Service Manual and Resetter Printer at http://printer1.blogspot.com

ADF assembly

1. Open the scanner cover (the scanner cover contains the ADF assembly).

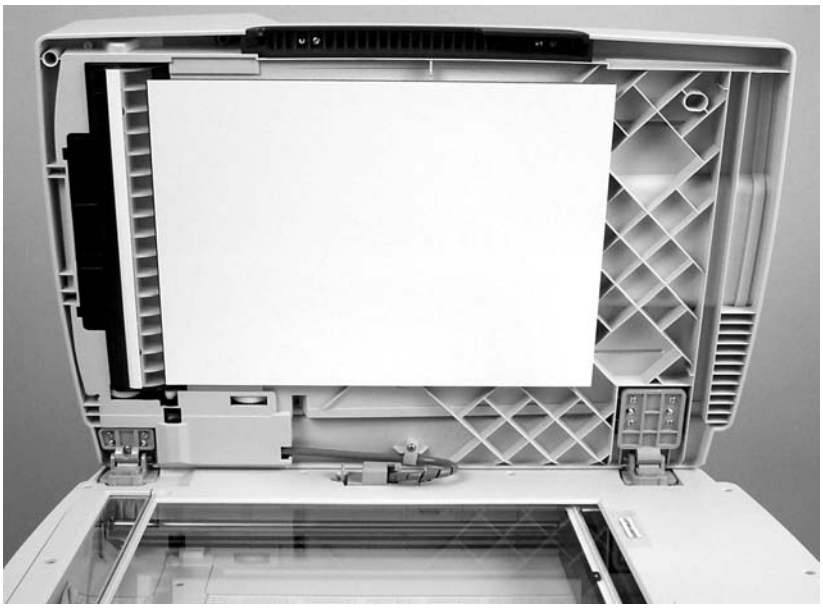

Figure 5-19 Remove the scanner/ADF assembly (1 of 3)

2. Squeeze the locking tabs on the ADF wire-harness plug (callout 1), and disconnect the plug from the flatbed.

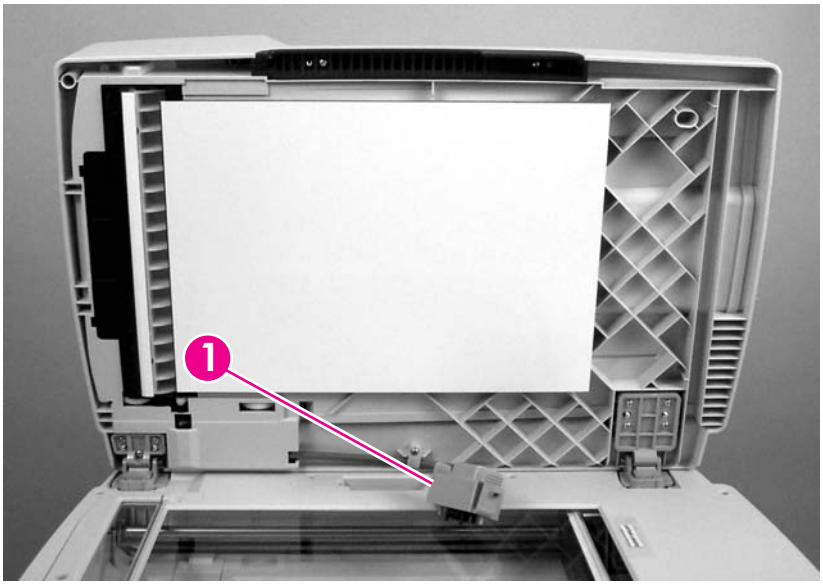

Figure 5-20 Remove the scanner/ADF assembly (2 of 3)

Download Free Service Manual and Resetter Printer at http://printer1.blogspot.com

3. Lift the scanner cover (and ADF assembly) straight up and off of the flatbed.

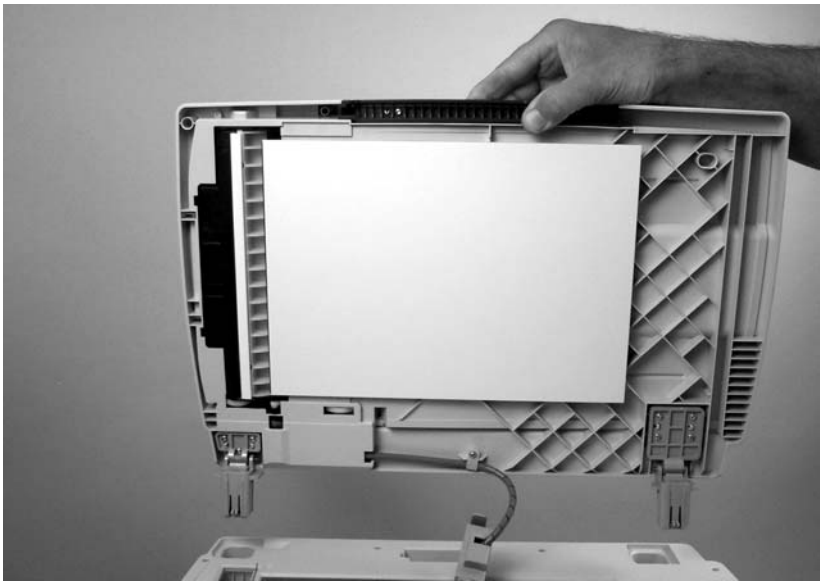

Figure 5-21 Remove the scanner/ADF assembly (3 of 3)

Download Free Service Manual and Resetter Printer at http://printer1.blogspot.com

Scanner assembly

1. Remove the left cover. See Left cover on page 116.

2. Disconnect two FFC connectors (callout 1; J1 and J4), two wire-harness connectors (callout 2; J2 and P2) from the formatter. Disconnect one ground-wire terminal lug (callout 3) from the all-in-one chassis.

> **CAUTION** Do not bend or fold the flat flexible cables (FFCs) during removal or installation. Also, do not straighten pre-folds in the FFCs. You *must* make sure that all FFCs are fully seated in their connectors. Failure to fully seat an FFC into a connector can cause a short circuit in a PCA.

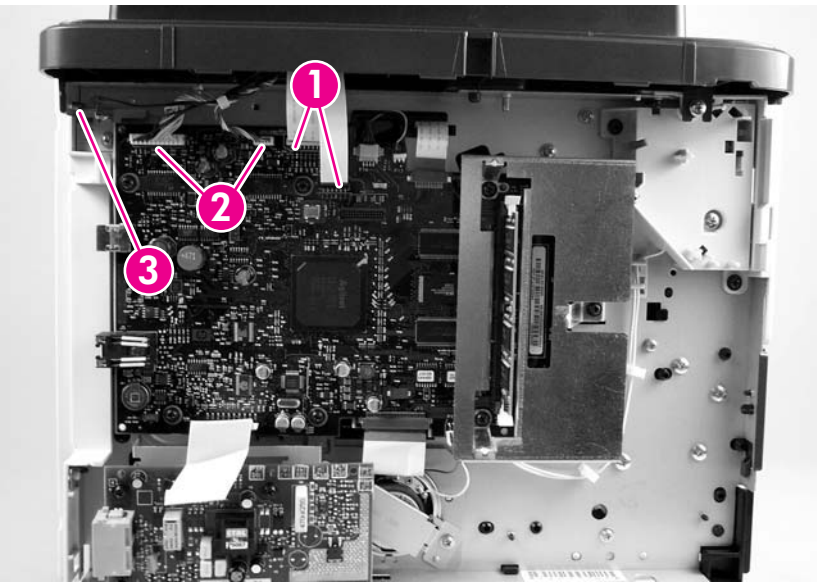

Figure 5-22 Remove the scanner/ADF assembly (1 of 3)

3. Remove four screws (callout 4).

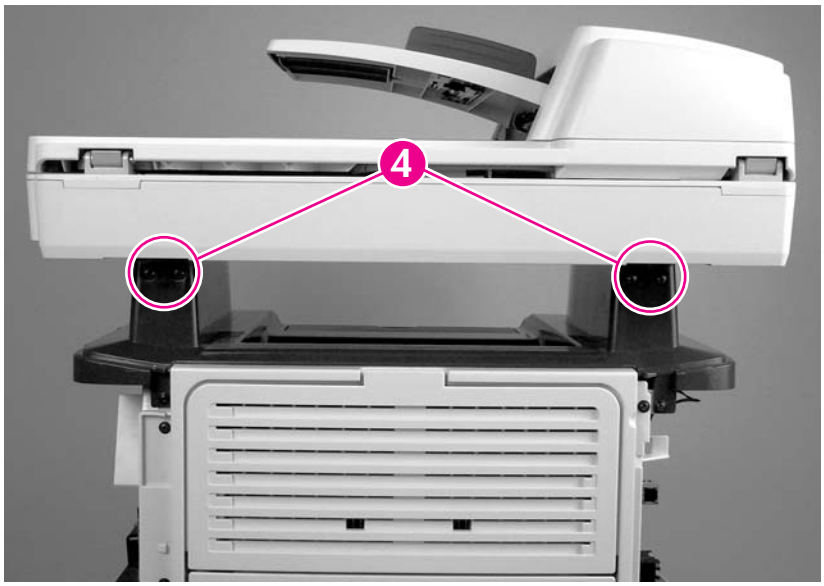

Figure 5-23 Remove the scanner/ADF assembly (2 of 3)

Download Free Service Manual and Resetter Printer at http://printer1.blogspot.com

4. Slide the scanner/ADF assembly toward the front of the base unit, and then lift it up to remove it.

WARNING! The scanner cover (which contains the ADF assembly) is not captive when the scanner assembly is removed. The scanner cover can suddenly open and be damaged when you are handling the scanner assembly. You *must* keep the scanner assembly level to make sure that the scanner cover (ADF assembly) does not open.

CAUTION Make sure that you carefully pass the scanner wire-harnesses through the opening in the top cover. The connectors can be damaged if they become caught on the top cover.

Figure 5-24 Remove the scanner/ADF assembly (3 of 3)

Download Free Service Manual and Resetter Printer at http://printer1.blogspot.com

Bezel and control panel

1. Gently pry up on the corner of the control-panel bezel and carefully lift it up and off of the control panel to remove it.

NOTE If you are only replacing the bezel, you can disregard the remaining steps in this procedure. Use the following steps if you are also replacing the control panel.

Figure 5-25 Remove the bezel and control panel (1 of 4)

2. Remove one screw (callout 1).

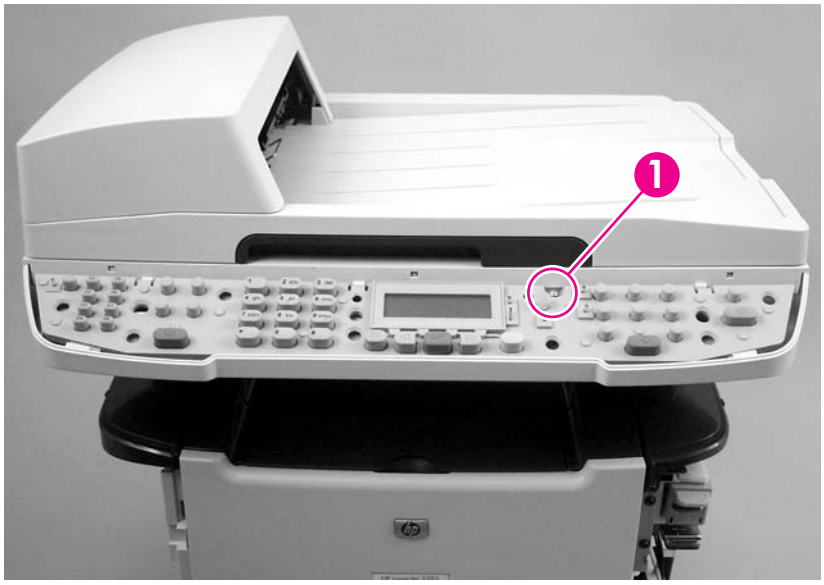

Figure 5-26 Remove the bezel and control panel (2 of 4)

Download Free Service Manual and Resetter Printer at http://printer1.blogspot.com

3. Use a small flatblade screwdriver to release the three locking tabs (callout 2) along the top of the control panel.

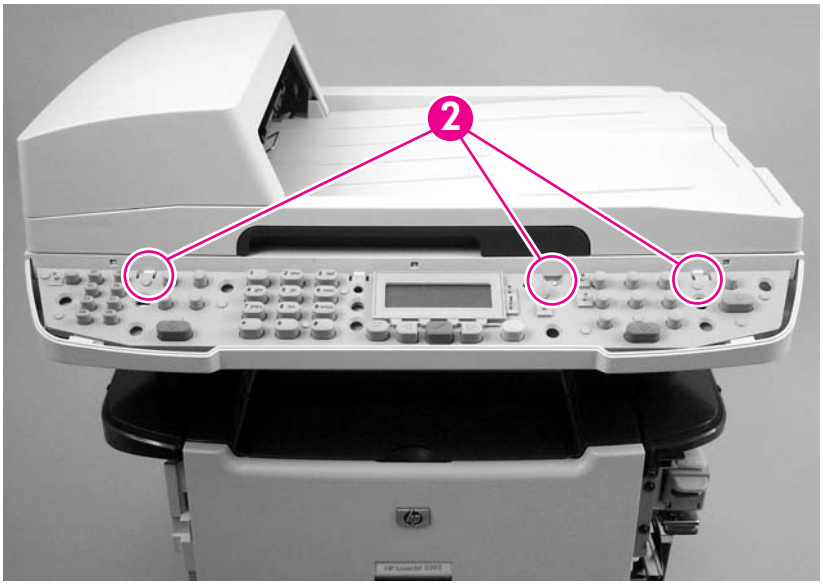

Figure 5-27 Remove the bezel and control panel (3 of 4)

Download Free Service Manual and Resetter Printer at http://printer1.blogspot.com

4. Turn the control panel over, and disconnect one FFC (callout 3).

CAUTION Do not bend or fold the flat flexible cables (FFCs) during removal or installation. Also, do not straighten pre-folds in the FFCs. You *must* make sure that all FFCs are fully seated in their connectors. Failure to fully seat an FFC into a connector can cause a short circuit in a PCA.

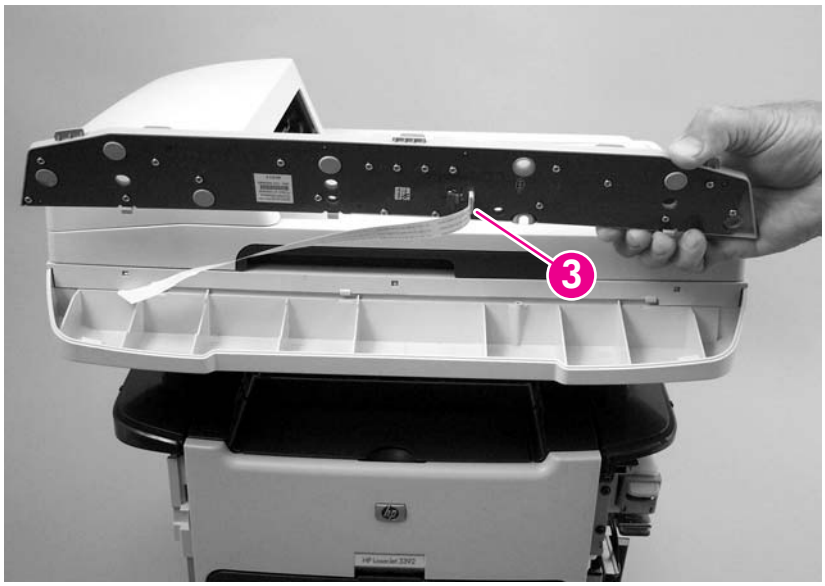

Figure 5-28 Remove the bezel and control panel (4 of 4)

Hint When the control panel is reinstalled, make sure that the tabs at the bottom of the panel (callout 4) fit underneath the retainers in the scanner body.

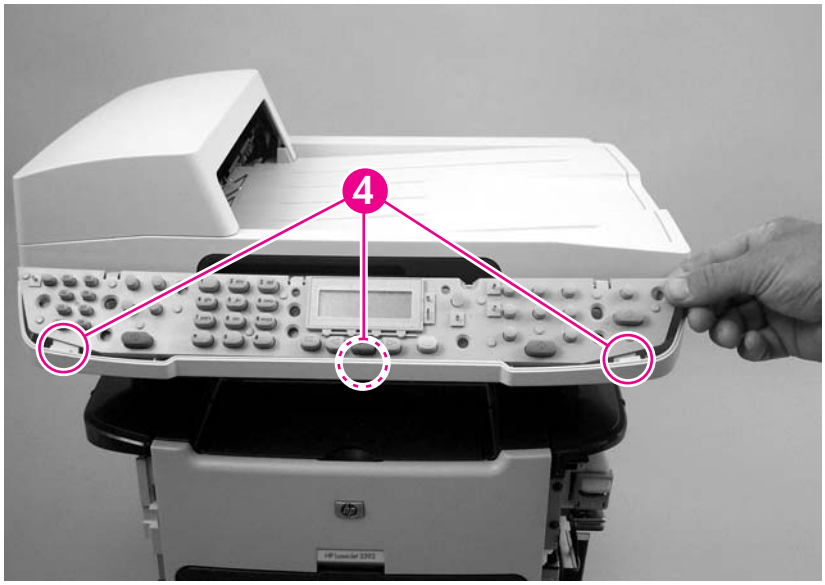

Download Free Service Manual and Resetter Printer at http://printer1.blogspot.com

Internal assemblies

Convenience-stapler assembly (HP LaserJet 3392 only)

1. Remove the right cover. See Right cover on page 114.
2. Disconnect one connector (callout 1).

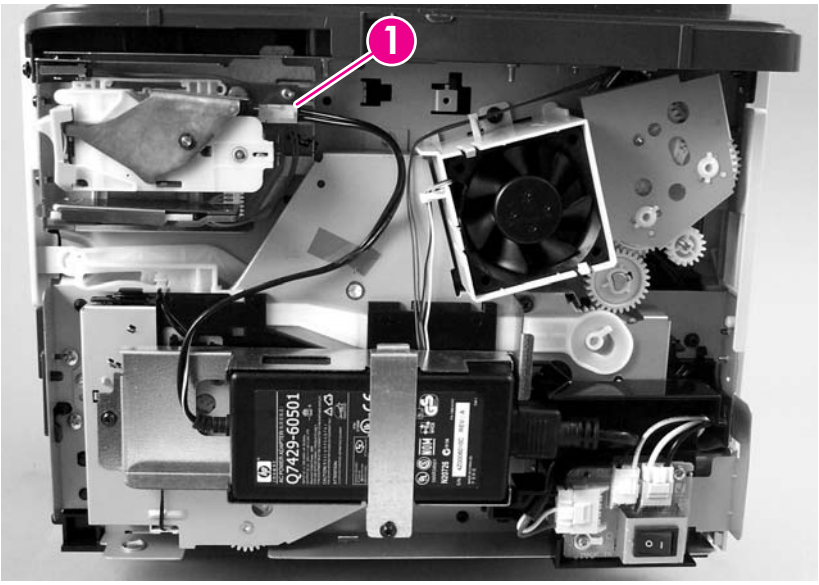

Figure 5-29 Remove the convenience-stapler assembly (1 of 2)

3. Remove two screws (callout 2), and separate the stapler assembly from the chassis to remove it.

Figure 5-30 Remove the convenience-stapler assembly (2 of 2)

Download Free Service Manual and Resetter Printer at http://printer1.blogspot.com

Convenience-stapler power supply (HP LaserJet 3392 only)

1. Remove the right cover. See Right cover on page 114.

2. Disconnect one connector (callout 1) at the convenience-stapler assembly, and remove one screw (callout 2).

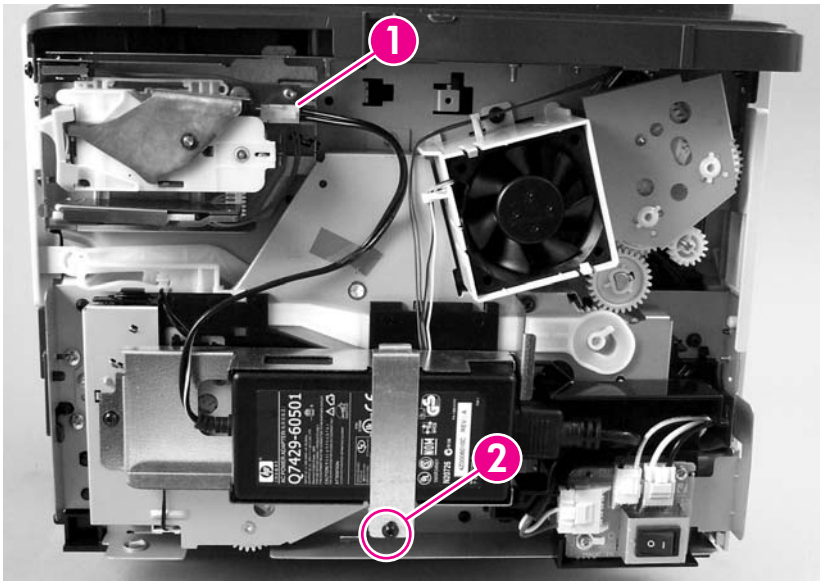

Figure 5-31 Remove the convenience-stapler power assembly (1 of 3)

3. Remove the sheet-metal strap, and separate the convenience-stapler power supply from the chassis.

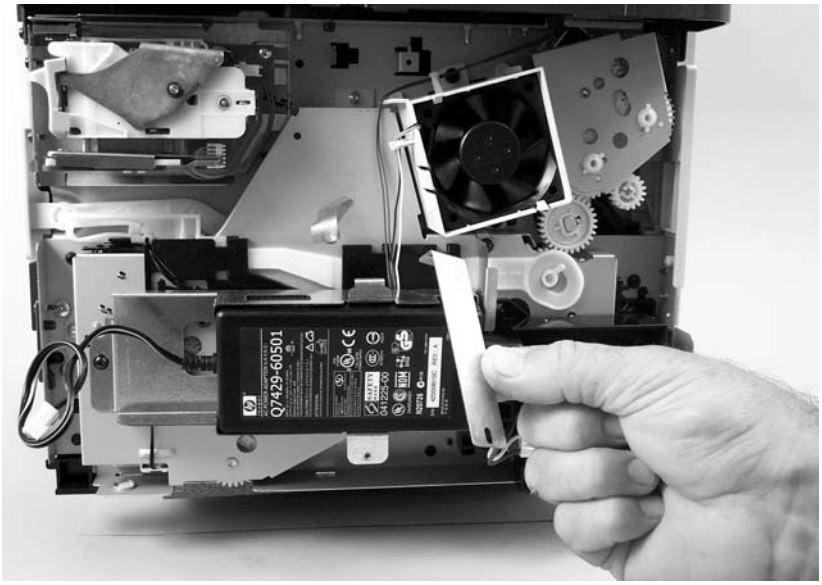

Figure 5-32 Remove the convenience-stapler power assembly (2 of 3)

Download Free Service Manual and Resetter Printer at http://printer1.blogspot.com

4. Disconnect one connector and remove the convenience-stapler power supply.

Figure 5-33 Remove the convenience-stapler power assembly (3 of 3)

Download Free Service Manual and Resetter Printer at http://printer1.blogspot.com

Convenience-stapler ac inlet cable (HP LaserJet 3392 only)

1. Remove the right cover. See Right cover on page 114.
2. Disconnect two connectors (callout 1) to remove the convenience-stapler ac inlet cable.

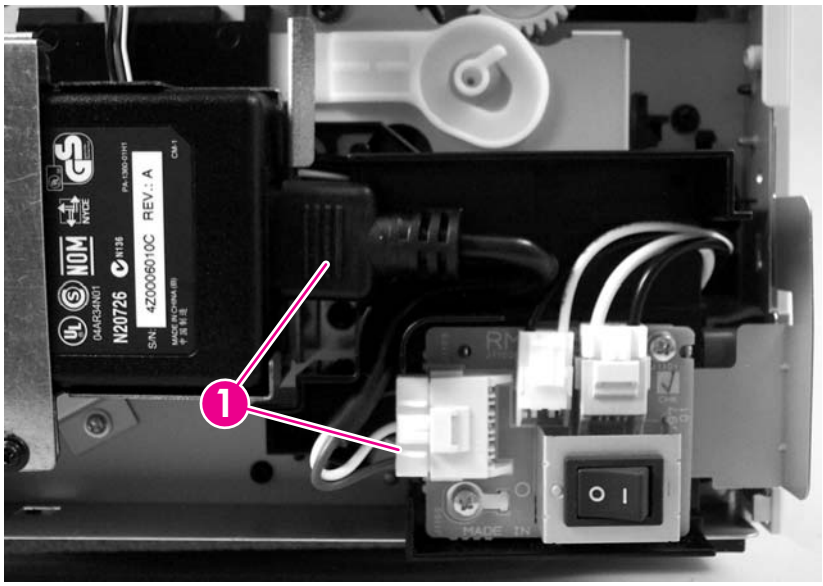

Figure 5-34 Remove the convenience-stapler ac inlet cable

Download Free Service Manual and Resetter Printer at http://printer1.blogspot.com

Convenience-stapler power supply bracket and strap (HP LaserJet 3392 only)

1. Remove the following components.
   - Right cover. See Right cover on page 114.
   - Convenience stapler power supply (HP LaserJet 3392 only). See Convenience-stapler power supply (HP LaserJet 3392 only) on page 132.

     NOTE When you remove the convenience-stapler power supply, you also remove the sheet-metal strap.

2. Remove three screws (callout 1) and separate the sheet-metal bracket (callout 2) from the all-in-one chassis to remove it.

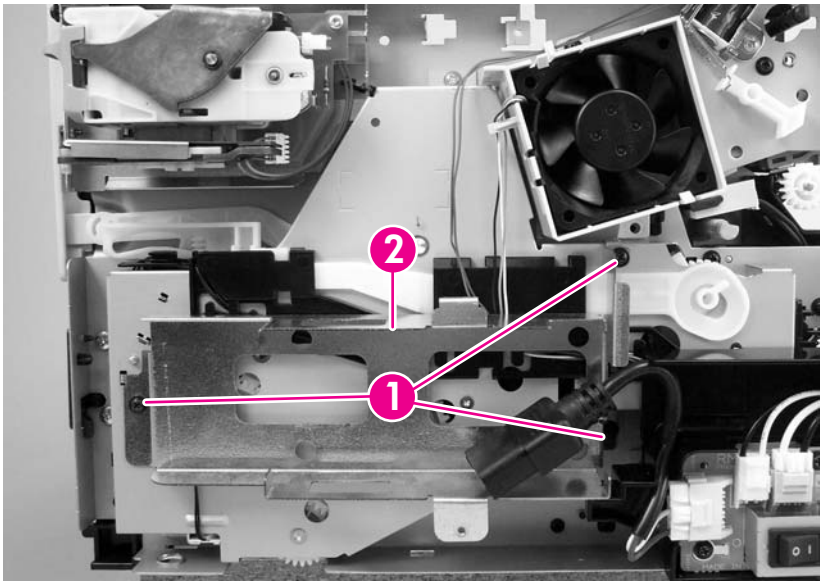

Figure 5-35 Remove the convenience-stapler bracket and strap

Download Free Service Manual and Resetter Printer at http://printer1.blogspot.com

Speaker

1. Remove the left cover. See Left cover on page 116.

2. Disconnect one FFC (callout 1; J1) from the line interface unit (LIU), remove three screws (callout 2), and remove the LIU (callout 3).

CAUTION PCAs are sensitive to electrostatic discharge (ESD). Look for the ESD reminder when removing PCAs. Always perform service work at an ESD-protected workstation or mat. If an ESD workstation or mat is not available, ground yourself by touching the sheet-metal chassis *before* touching an ESD-sensitive part.

Protect the ESD-sensitive parts by placing them in ESD pouches when they are out of the all-in-one.

CAUTION Do not bend or fold the flat flexible cables (FFCs) during removal or installation. Also, do not straighten pre-folds in the FFCs. You *must* make sure that all FFCs are fully seated in their connectors. Failure to fully seat an FFC into a connector can cause a short circuit in a PCA.

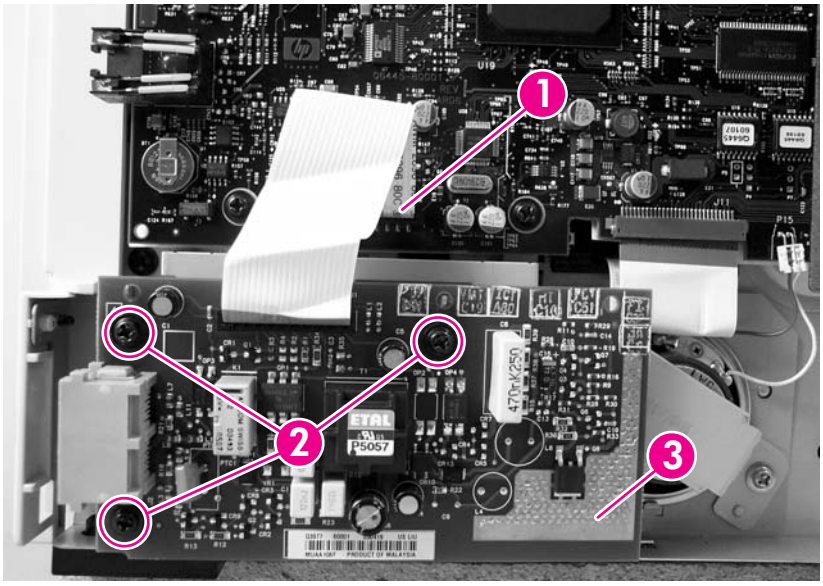

Figure 5-36 Remove the speaker (1 of 2)

3. Remove one screw (callout 4) and the metal plate (callout 5).

Download Free Service Manual and Resetter Printer at http://printer1.blogspot.com

4. Disconnect one connector (callout 6) and separate the speaker (callout 7) from the all-in-one to remove it.

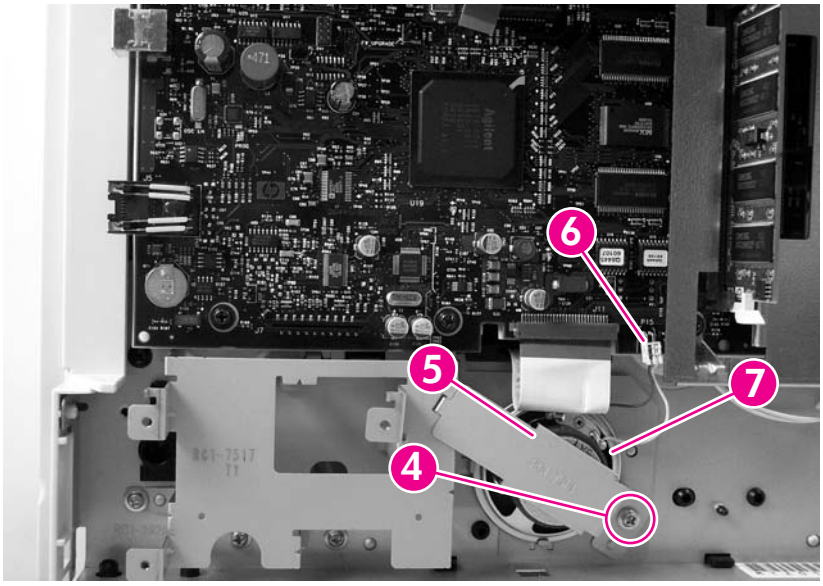

Figure 5-37 Remove the speaker (2 of 2)

Download Free Service Manual and Resetter Printer at http://printer1.blogspot.com

Power-switch PCA

1. Remove the right cover. See Right cover on page 114.
2. Disconnect two connectors (callout 1) and remove two screws (callout 2).

NOTE For the HP LaserJet 3392, disconnect one additional connector (callout 3)

3. Separate the power-switch PCA (callout 4) from the all-in-one to remove it.

CAUTION PCAs are sensitive to electrostatic discharge (ESD). Look for the ESD reminder when removing PCAs. Always perform service work at an ESD-protected workstation or mat. If an ESD workstation or mat is not available, ground yourself by touching the sheet-metal chassis *before* touching an ESD-sensitive part.

Protect the ESD-sensitive parts by placing them in ESD pouches when they are out of the all-in-one.

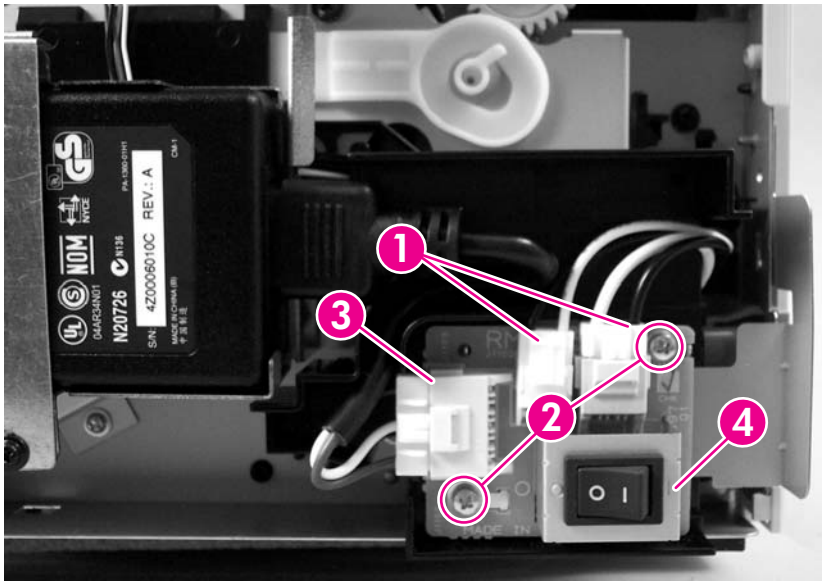

Figure 5-38 Remove the power-switch PCA (HP LaserJet 3392 shown)

Download Free Service Manual and Resetter Printer at http://printer1.blogspot.com

Formatter

CAUTION PCAs are sensitive to electrostatic discharge (ESD). Look for the ESD reminder when removing PCAs. Always perform service work at an ESD-protected workstation or mat. If an ESD workstation or mat is not available, ground yourself by touching the sheet-metal chassis *before* touching an ESD-sensitive part.

Protect the ESD-sensitive parts by placing them in ESD pouches when they are out of the all-in-one.

CAUTION Do not bend or fold the flat flexible cables (FFCs) during removal or installation. Also, do not straighten pre-folds in the FFCs. You *must* make sure that all FFCs are fully seated in their connectors. Failure to fully seat an FFC into a connector can cause a short circuit in a PCA.

1. Remove the left cover. See Left cover on page 116.
2. Disconnect five connectors (callout 1; P2, J2, P14, P13, P15) and five FFCs (callout 2; J4, J1, J10, J11, J7).

CAUTION The connector at PCA location P13 is very fragile and can be easily damaged. Be very careful when disconnecting this connector.

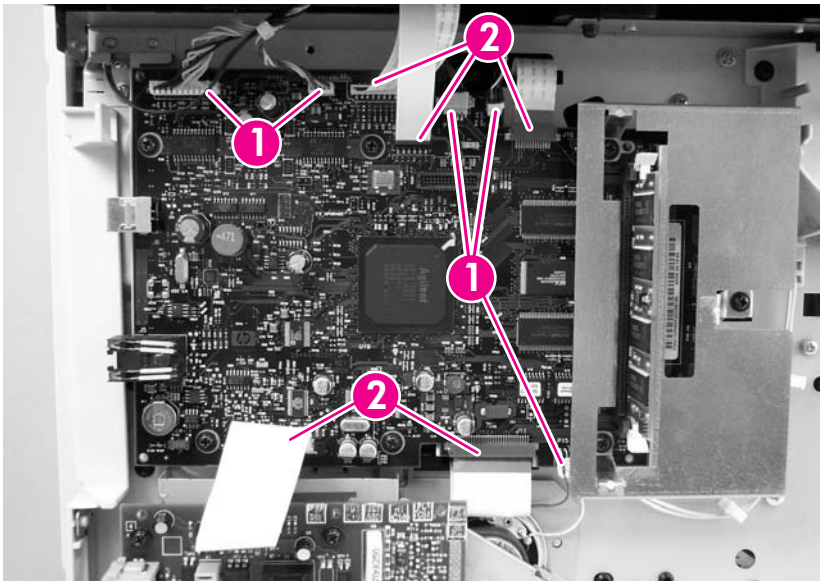

Figure 5-39 Remove the formatter (1 of 3)

Download Free Service Manual and Resetter Printer at http://printer1.blogspot.com

3. Remove three screws (callout 3) and the sheet-metal cover (callout 4).

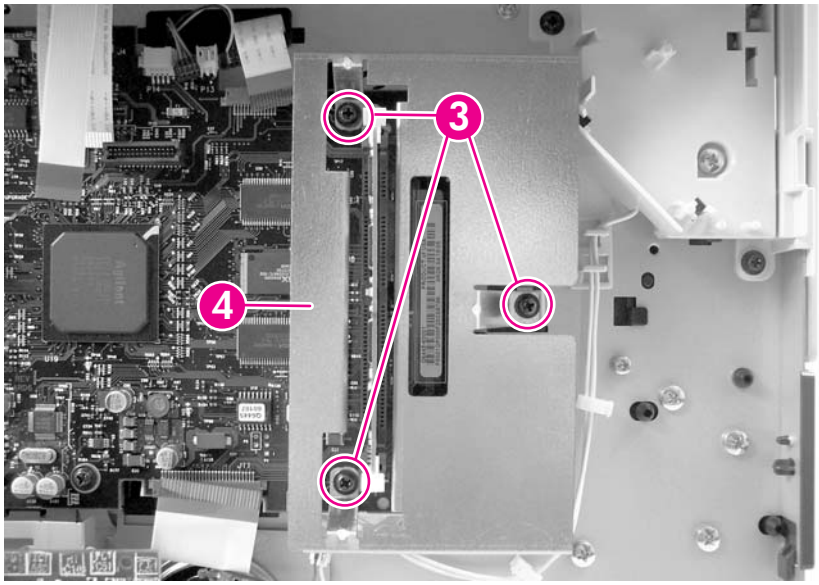

Figure 5-40 Remove the formatter (2 of 3)

Download Free Service Manual and Resetter Printer at http://printer1.blogspot.com

4. Remove four screws (callout 5), and separate the formatter from the all-in-one to remove it.

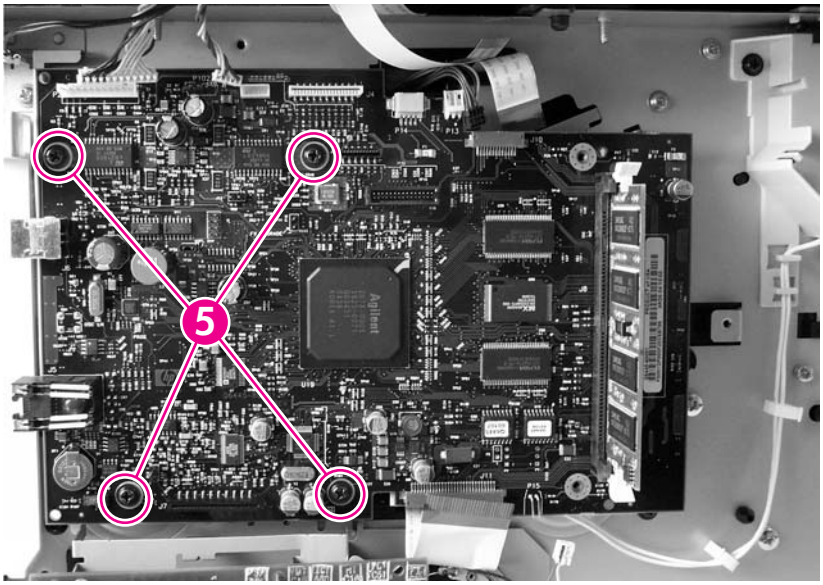

Figure 5-41 Remove the formatter (3 of 3)

CAUTION Make sure that you install the protective sheet behind the formatter when you reinstall it. Failure to install the protective sheet might cause a short circuit in and damage to the formatter.

Hint It might be easier to thread the wide-scanner FFC through the ferrite at the top of the formatter PCA if you first remove the ferrite from the chassis.

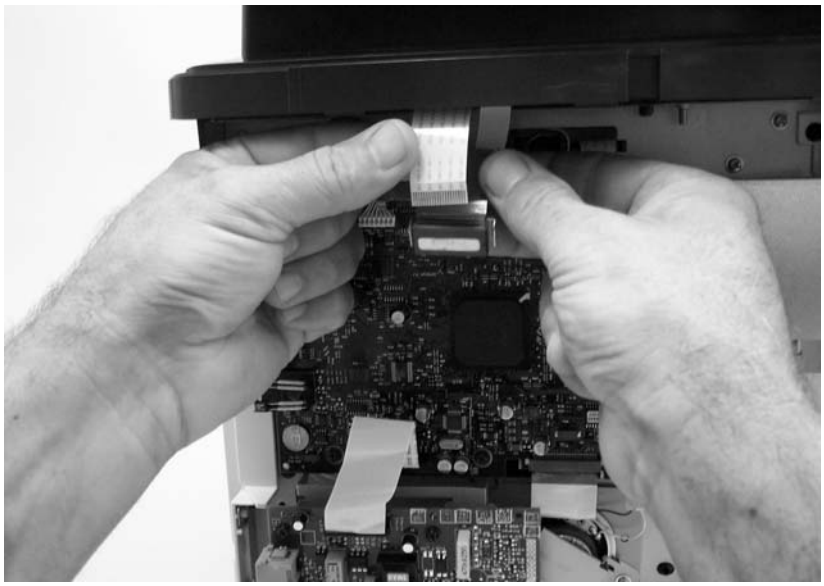

Download Free Service Manual and Resetter Printer at http://printer1.blogspot.com

Duplex assembly

1. Remove the following components.
   - Right cover. See Right cover on page 114.
   - Left cover. See Left cover on page 116.
   - Rear cover. See Rear cover on page 120.
2. Push down on the green lever at the front of the all-in-one to unlock and lower the duplex assembly.

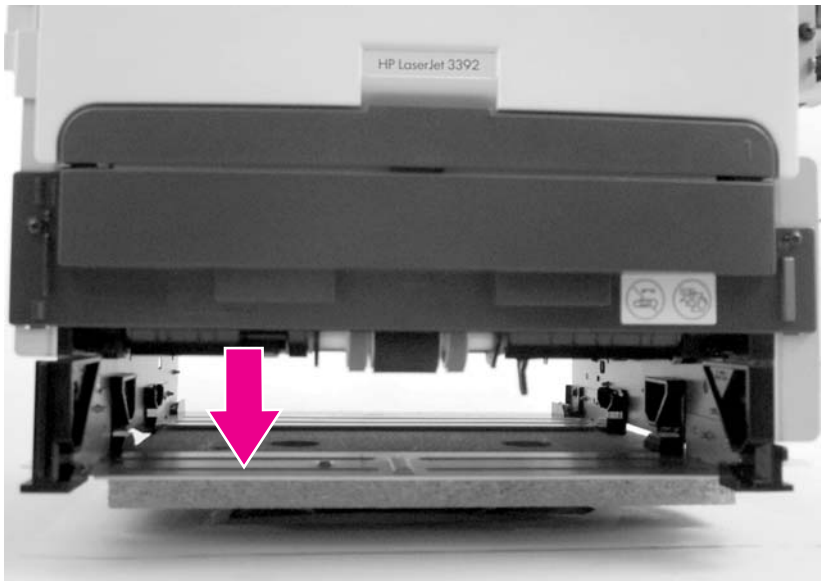

Figure 5-42 Remove the duplex assembly (1 of 3)

3. Use a small flatblade screwdriver to release the locking tab on the duplex assembly hinge (the tab is behind the LIU). Rotate the hinge toward the front of the front of the all-in-one until the tabs on the hinge align with the slots in the chassis, and then remove the hinge.

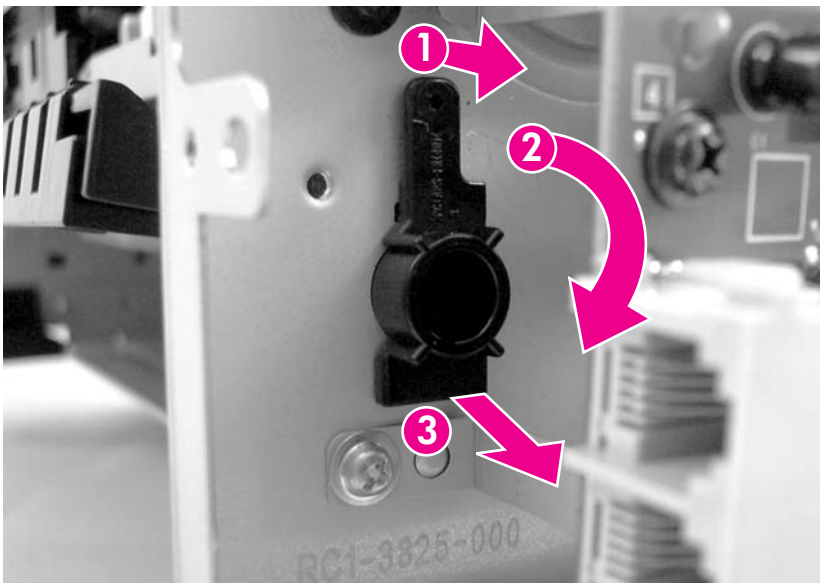

Figure 5-43 Remove the duplex assembly (2 of 3)

Download Free Service Manual and Resetter Printer at http://printer1.blogspot.com

4. Pull the duplex assembly out through the rear of the all-in-one to remove it.

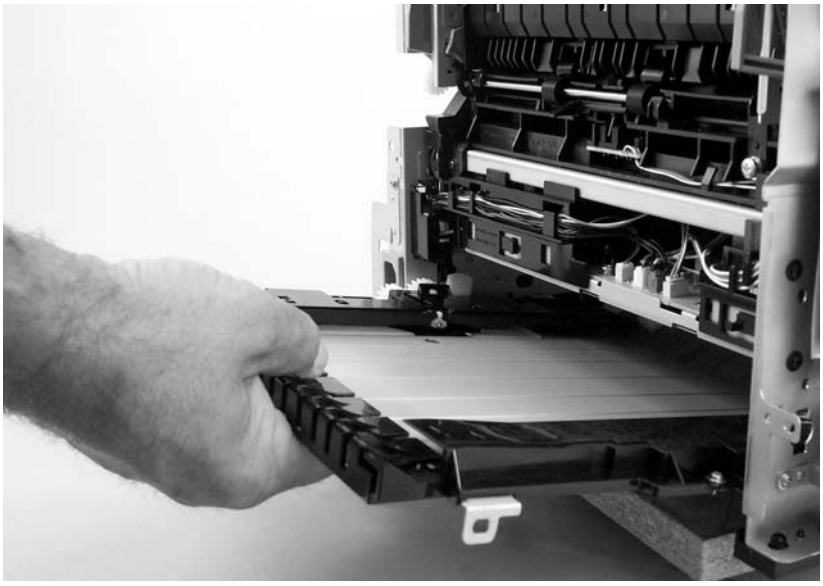

Figure 5-44 Remove the duplex assembly (3 of 3)

Hint When you reinstall the duplex assembly, make sure that the size-selection switch is set correctly for the media size that is used in your country/region.

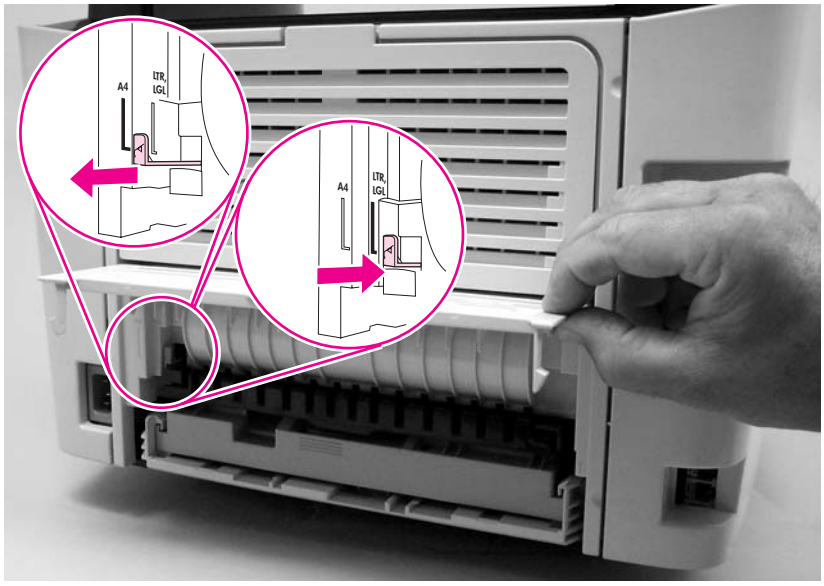

Download Free Service Manual and Resetter Printer at http://printer1.blogspot.com

Laser/scanner

CAUTION PCAs are sensitive to electrostatic discharge (ESD). Look for the ESD reminder when removing PCAs. Always perform service work at an ESD-protected workstation or mat. If an ESD workstation or mat is not available, ground yourself by touching the sheet-metal chassis *before* touching an ESD-sensitive part.

Protect the ESD-sensitive parts by placing them in ESD pouches when they are out of the all-in-one.

CAUTION Do not bend or fold the flat flexible cables (FFCs) during removal or installation. Also, do not straighten pre-folds in the FFCs. You *must* make sure that all FFCs are fully seated in their connectors. Failure to fully seat an FFC into a connector can cause a short circuit in a PCA.

1. Remove the following components.
   - Right cover. See Right cover on page 114.
   - Left cover. See Left cover on page 116.
   - Rear cover. See Rear cover on page 120.
   - Top cover. See Top cover on page 122.
2. Disconnect one FFC (callout 1) from the laser/scanner PCA.
3. Disconnect one connector (callout 2) from the top of the laser/scanner.
4. Remove all of the wire-harnesses (callout 3) from the retainers.

   NOTE Examine the cable routing as you remove the wire-harnesses.

Download Free Service Manual and Resetter Printer at http://printer1.blogspot.com

5. Remove four screws (callout 4).

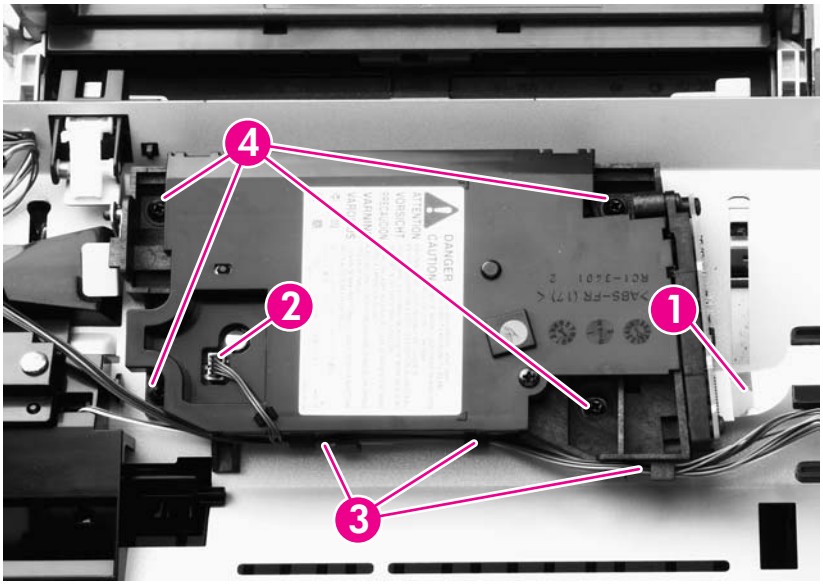

Figure 5-45 Remove the laser/scanner assembly

6. Lift the laser/scanner out of the all-in-one.

NOTE Examine the shutter switch as you lift the laser/scanner out of the all-in-one.

Download Free Service Manual and Resetter Printer at http://printer1.blogspot.com

Memory-tag-reader assembly

1. Remove the following components.
   - Right cover. See Right cover on page 114.
   - Left cover. See Left cover on page 116.
   - Rear cover. See Rear cover on page 120.
   - Top cover. See Top cover on page 122.
2. Remove the fan from the all-in-one chassis (see steps 3 and 4 of Fan on page 148).
3. Remove one cable (callout 1) from the cable-holder on top of the memory-tag-reader cover.
4. Disconnect one cable from the formatter (callout 2).

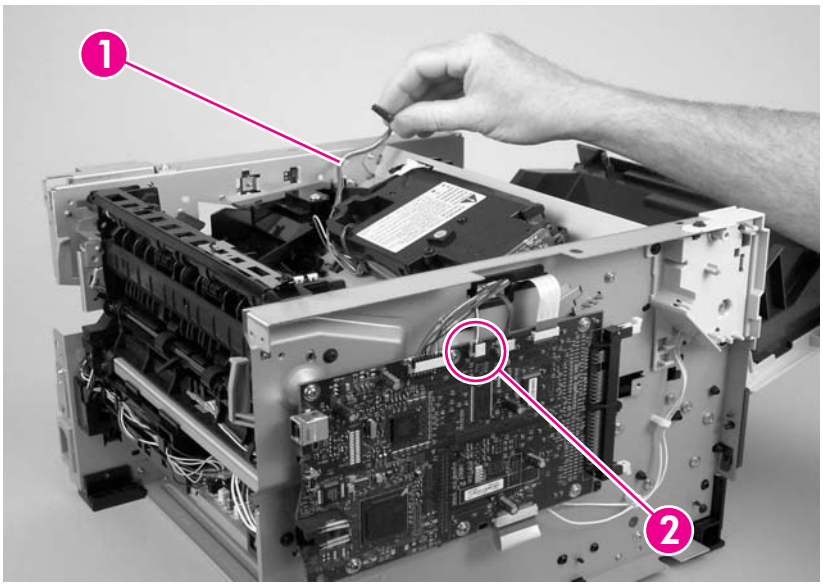

Figure 5-46 Remove the memory-tag-reader assembly (1 of 2)

Download Free Service Manual and Resetter Printer at http://printer1.blogspot.com

5. Remove one screw (callout 3).

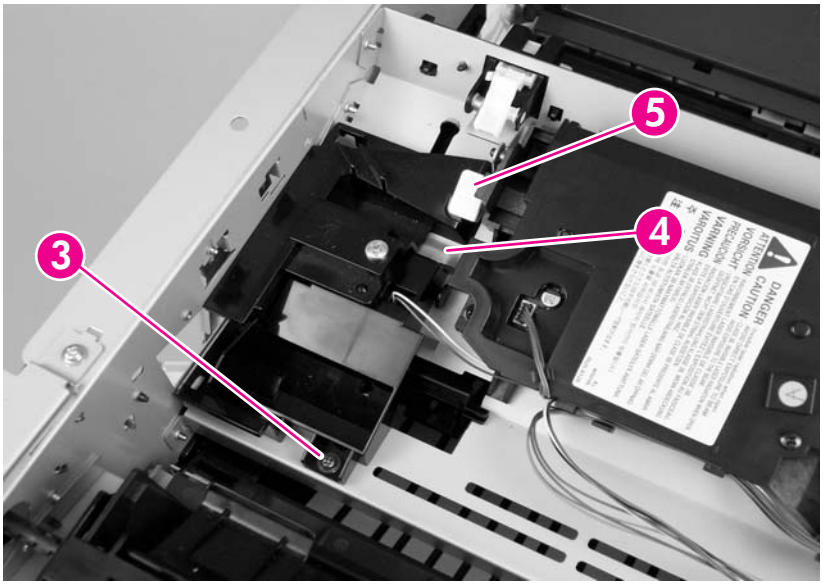

Figure 5-47 Remove the memory-tag-reader assembly (2 of 2)

6. Lift up slightly the back of the memory-tag-reader assembly and then slide the assembly toward the back of the all-in-one to release it from the laser/scanner plate.

Hint Make sure that the tab at the bottom of the assembly fits in the all-in-one chassis (callout 4) and that the front of the assembly is under the laser/scanner shutter (callout 5). See Figure 5-47 Remove the memory-tag-reader assembly (2 of 2) on page 147.

Download Free Service Manual and Resetter Printer at http://printer1.blogspot.com

Fuser

Several parts must be removed before you can remove the fuser. Removal procedures for the following parts are included in this section about removing the fuser:

- Fan
- Duplex-drive gears
- Duplex solenoid

Fan

1. Remove the following components.
   - Right cover. See Right cover on page 114.
   - Left cover. See Left cover on page 116.
   - Rear cover. See Rear cover on page 120.
   - Top cover. See Top cover on page 122.
   - Convenience-stapler power supply. See Convenience-stapler power supply (HP LaserJet 3392 only) on page 132.
   - Convenience-stapler power supply bracket. See Convenience-stapler power supply bracket and strap (HP LaserJet 3392 only) on page 135.
2. Disconnect one connector (callout 1) at the ECU and feed the wire-harness through the hole in the chassis (behind the power-switch PCA).

   NOTE It might be easier to remove the wire-harness if you remove the power-switch PCA and mounting bracket. See Power-switch PCA on page 138.

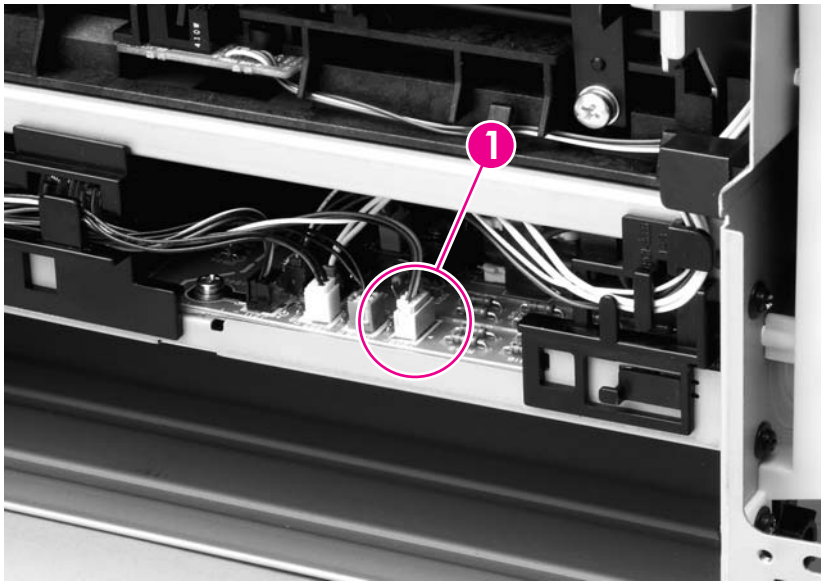

Figure 5-48 Remove the fan (1 of 2)

Download Free Service Manual and Resetter Printer at http://printer1.blogspot.com

3. Remove two screws (callout 2) and then lift the fan off of the all-in-one.

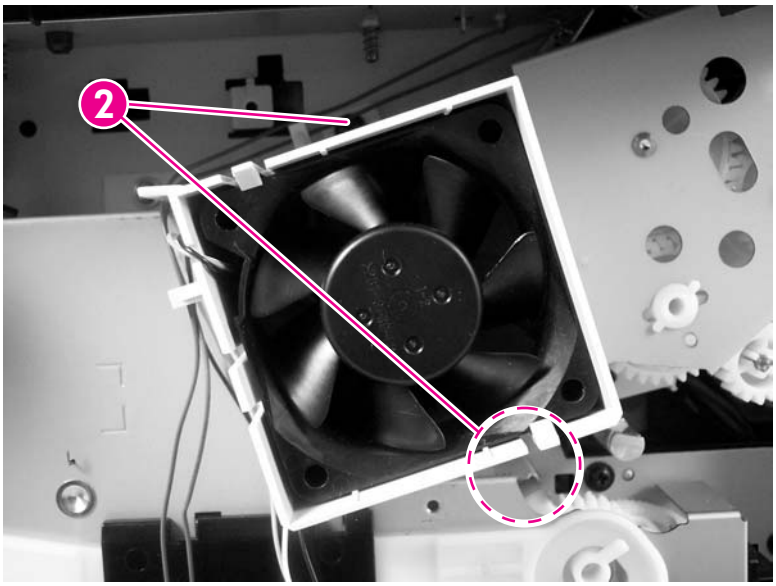

Figure 5-49 Remove the fan (2 of 2)

Download Free Service Manual and Resetter Printer at http://printer1.blogspot.com

Duplex-drive gears

1. Remove the following components.
   - Right cover. See Right cover on page 114.
   - Left cover. See Left cover on page 116.
   - Rear cover. See Rear cover on page 120.
   - Top cover. See Top cover on page 122.
   - Convenience-stapler power supply (HP LaserJet 3392 only). See Convenience-stapler power supply (HP LaserJet 3392 only) on page 132.
   - Convenience-stapler bracket and strap (HP LaserJet 3392 only). See Convenience-stapler power supply bracket and strap (HP LaserJet 3392 only) on page 135.
   - Fan. See Fan on page 148.
2. Remove three screws (callout 1) and then lift the assembly away from the all-in-one.

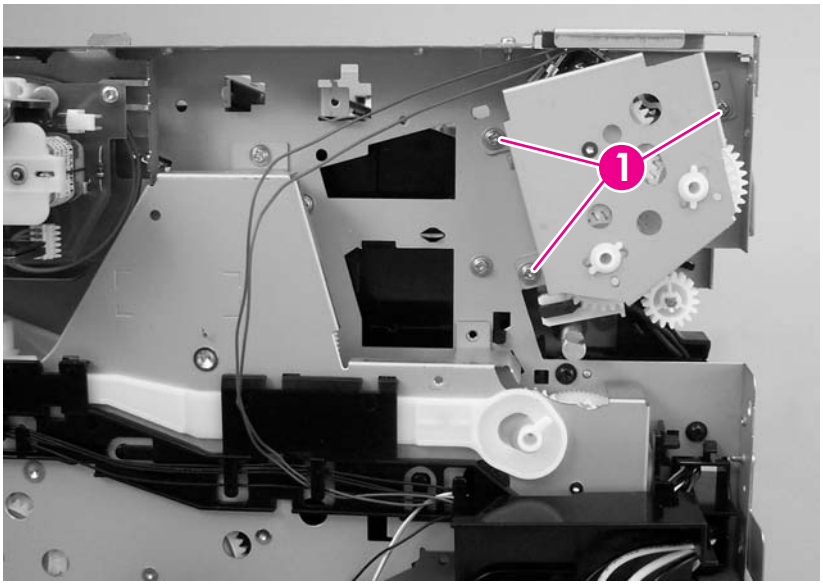

Figure 5-50 Remove the duplex-drive gears

NOTE The gears are not attached to the gear plate. Carefully remove the gear plate and the gears together to prevent them from falling out of the assembly.

Hint It might be easier to replace the assembly if you place the two large gear-sets into the appropriate holes on the chassis first and then line up the holes in the gear plate with the gears as you replace the plate.

Download Free Service Manual and Resetter Printer at http://printer1.blogspot.com

Duplex solenoid

1. Remove the following components.
   - Right cover. See Right cover on page 114.
   - Left cover. See Left cover on page 116.
   - Rear cover. See Rear cover on page 120.
   - Top cover. See Top cover on page 122.
   - Convenience-stapler power supply (HP LaserJet 3392 only). See Convenience-stapler power supply (HP LaserJet 3392 only) on page 132.
   - Convenience-stapler bracket and strap (HP LaserJet 3392 only). See Convenience-stapler power supply bracket and strap (HP LaserJet 3392 only) on page 135.
   - Fan. See Fan on page 148.
   - Duplex-drive gears. See Duplex-drive gears on page 150.
2. Disconnect one connector (callout 1; J211) at the ECU. Feed the wire-harness out of the all-in-one and wire-harness guides.

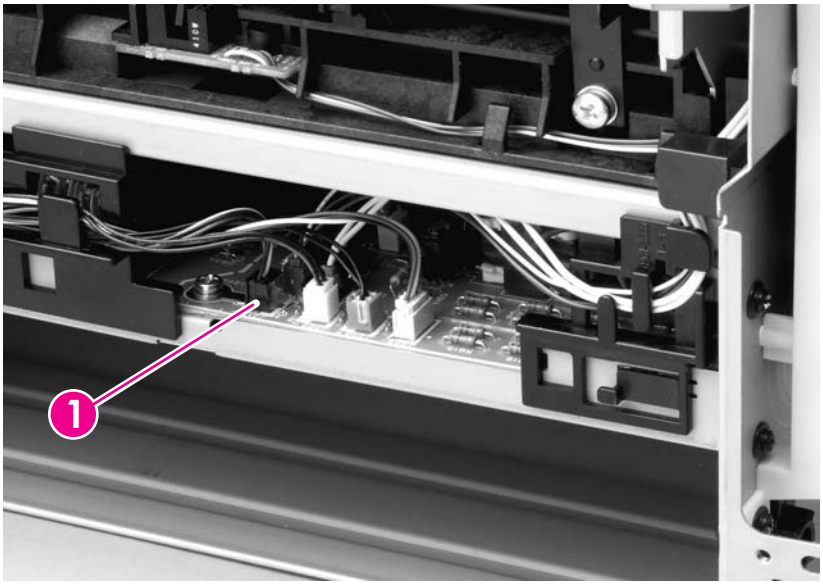

Figure 5-51 Remove the duplex solenoid (1 of 2)

Download Free Service Manual and Resetter Printer at http://printer1.blogspot.com

3. Remove one screw (callout 2) and lift the solenoid off of the all-in-one chassis.

NOTE The solenoid lever (callout 3) is not retained. Do not lose this lever.

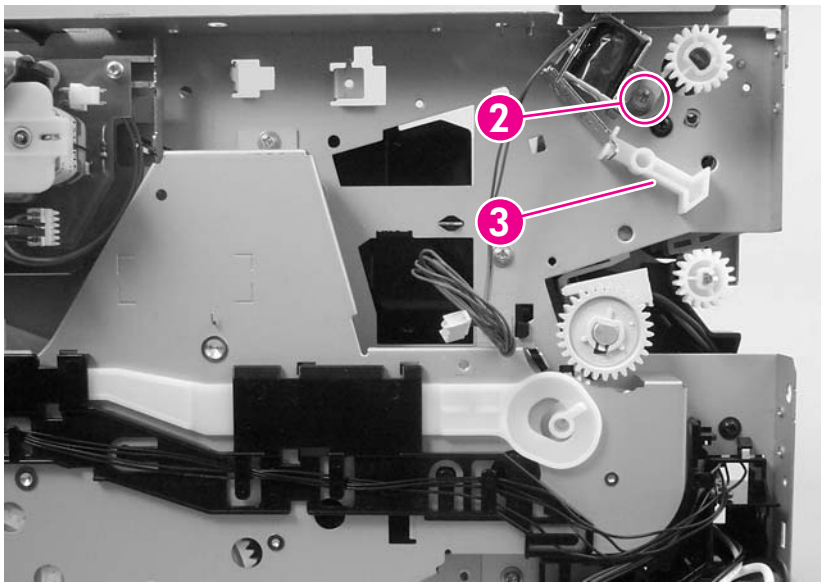

Figure 5-52 Remove the duplex solenoid (2 of 2)

Download Free Service Manual and Resetter Printer at http://printer1.blogspot.com

Fuser

1. Remove the following components.
   - Right cover. See Right cover on page 114.
   - Left cover. See Left cover on page 116.
   - Rear cover. See Rear cover on page 120.
   - Top cover. See Top cover on page 122.
   - Convenience-stapler power supply (HP LaserJet 3392 only). See Convenience-stapler power supply (HP LaserJet 3392 only) on page 132.
   - Convenience-stapler bracket and strap (HP LaserJet 3392 only). See Convenience-stapler power supply bracket and strap (HP LaserJet 3392 only) on page 135.
   - Power-switch PCA. See Power-switch PCA on page 138.
   - Formatter. See Formatter on page 139.
   - Fan. See Fan on page 148.
   - Duplex-drive gears. See Duplex-drive gears on page 150.
   - Duplex solenoid. See Duplex solenoid on page 151.
2. On the right side of the all-in-one, press the tabs on two gears (callout 1) to release the gears, and then slide the gears off of the shafts.

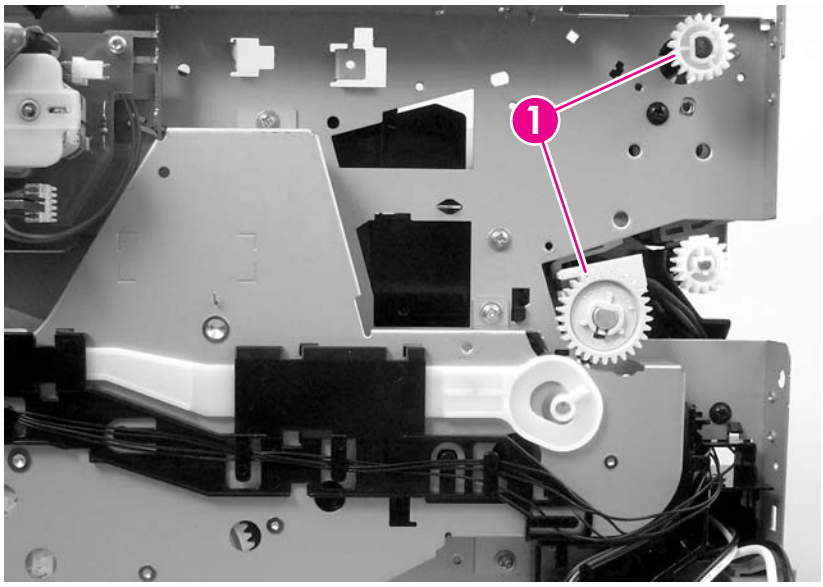

Figure 5-53 Remove the fuser (1 of 11)

Download Free Service Manual and Resetter Printer at http://printer1.blogspot.com

3. Disconnect four connectors (callout 2) from the ECU. Remove the wire-harness from the guides (callout 3)

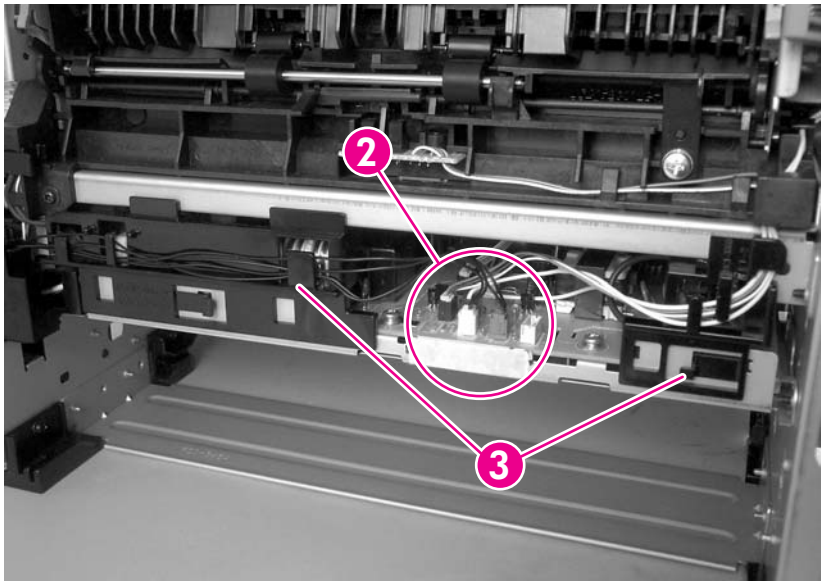

Figure 5-54 Remove the fuser (2 of 11)

4. Pull the tabs on the wire-harness holders (callout 4 and callout 5), slide them toward the center of the all-in-one to release them from the frame, and then remove the wire-harnesses.

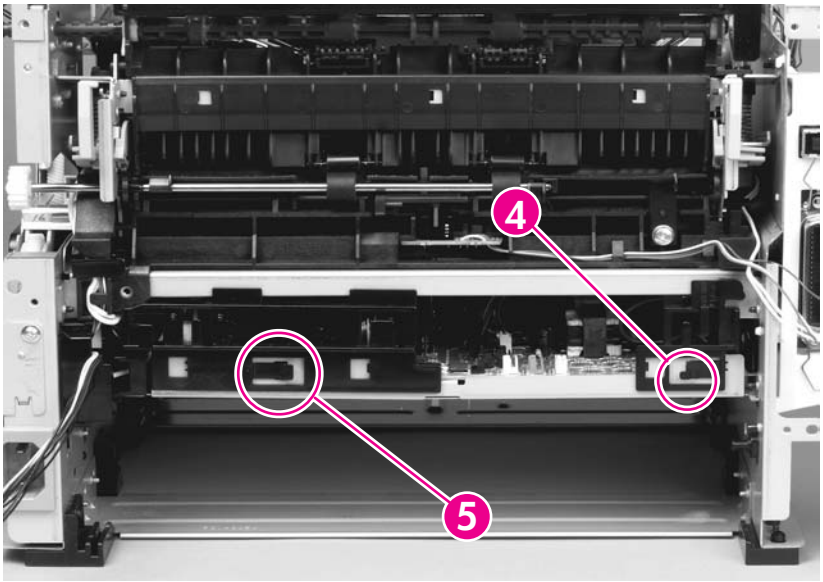

Figure 5-55 Remove the fuser (3 of 11)

Download Free Service Manual and Resetter Printer at http://printer1.blogspot.com

5. Disconnect three connectors (callout 6).

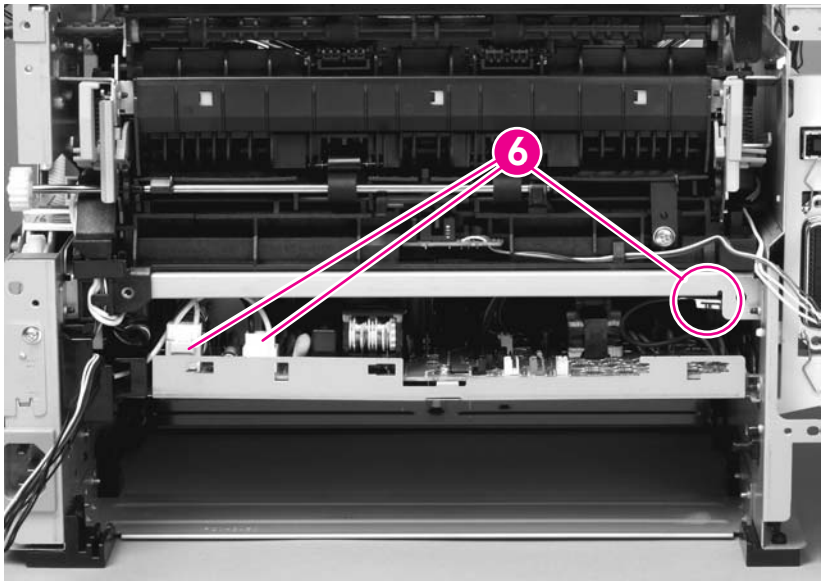

Figure 5-56 Remove the fuser (4 of 11)

6. Pull the wire-harness holder (callout 7) straight back to remove it, and then remove the wire-harnesses.

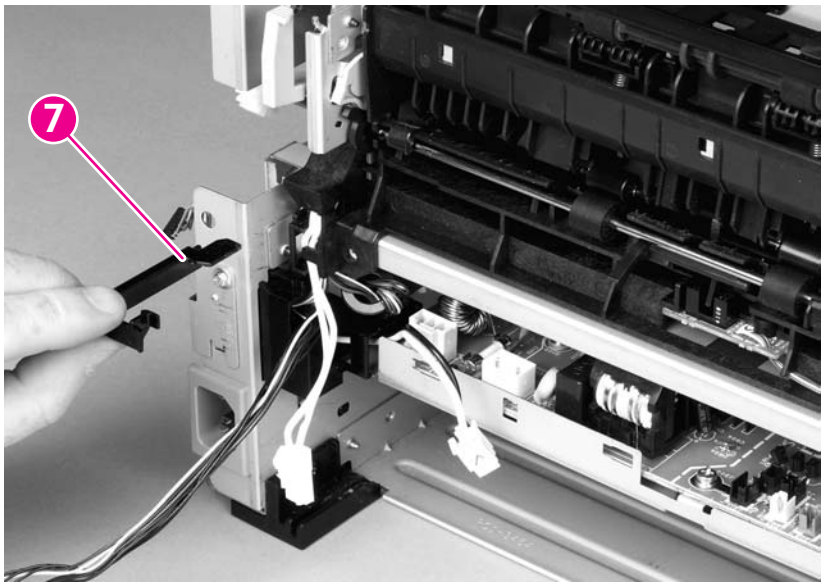

Figure 5-57 Remove the fuser (5 of 11)

Reinstallation tip You might find it easier to reassemble the wire-harnesses and the wire-harness holder if you put the smaller wires into place first.

Download Free Service Manual and Resetter Printer at http://printer1.blogspot.com

7. Remove one screw (callout 8) and release one clip (callout 9) on the wire guide that contains the optional tray 3 connector.

NOTE It is not necessary to remove the tray 3 connector or the wire-harness guide. But the guide does need to be released so that the tray 3 connector wire-harness is loose enough to be removed from a guide on the fuser later in this procedure.

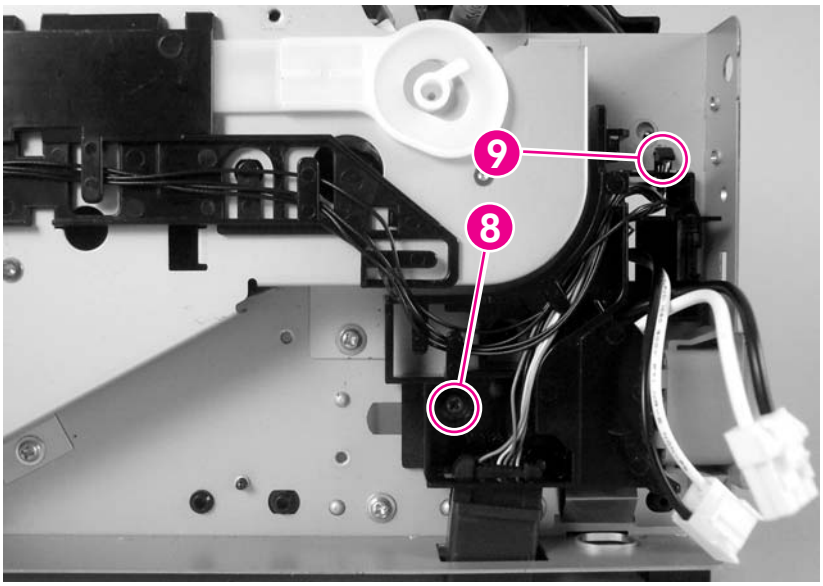

Figure 5-58 Remove the fuser (6 of 11)

8. Disconnect one connector (callout 10) and then remove the wire-harness from the guide.

NOTE Before you proceed to the next step, make sure that all of the wire-harnesses that you disconnected in previous steps have been released from any wire-harness guides and holders.

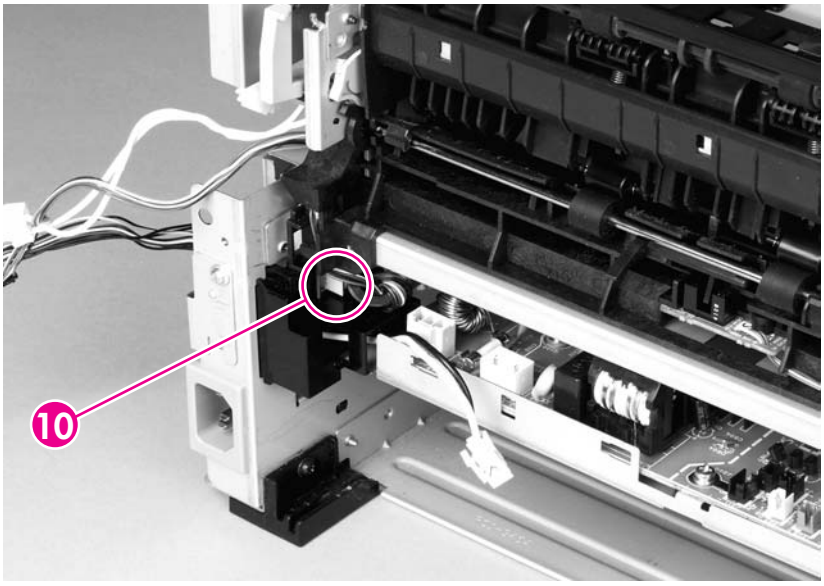

Figure 5-59 Remove the fuser (7 of 11)

Download Free Service Manual and Resetter Printer at http://printer1.blogspot.com

9. Remove three screws (callout 11) on the right side of the all-in-one.

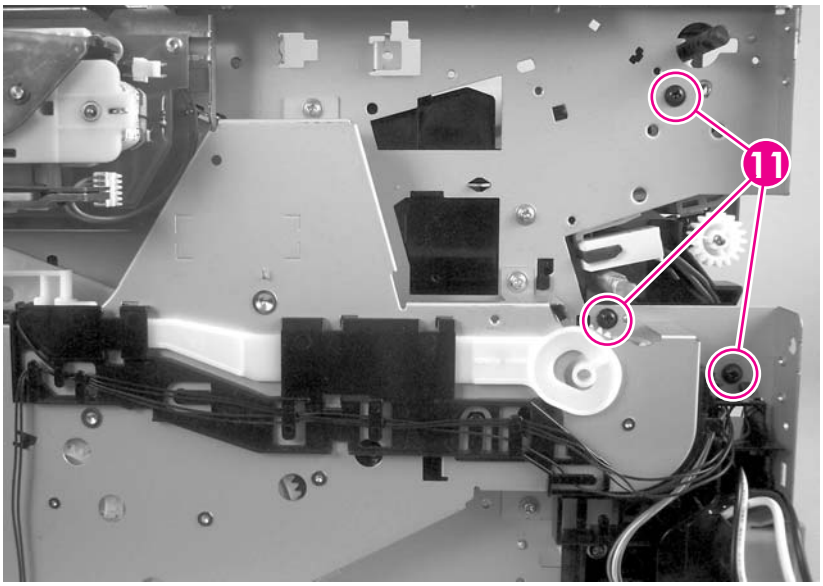

Figure 5-60 Remove the fuser (8 of 11)

10. Remove three screws (callout 12) from the left side of the all-in-one.

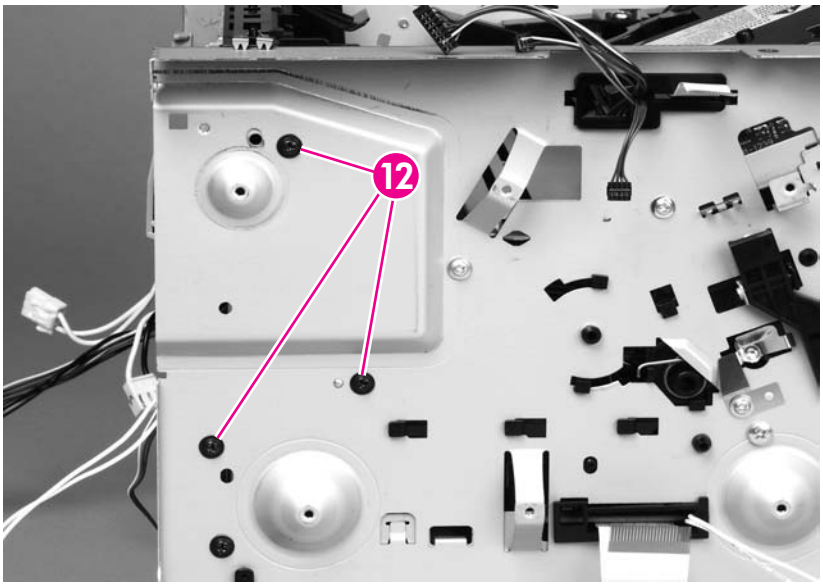

Figure 5-61 Remove the fuser (9 of 11)

Download Free Service Manual and Resetter Printer at http://printer1.blogspot.com

11. Pull on the all-in-one chassis at the top to spread the all-in-one frame and release the fuser from the frame.

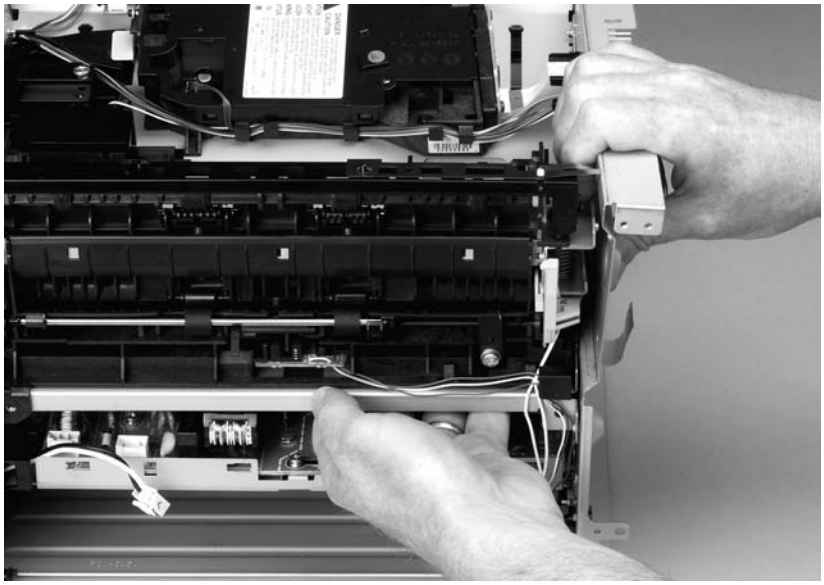

Figure 5-62 Remove the fuser (10 of 11)

12. Pull the fuser out of the all-in-one at an angle so that the delivery-roller shaft clears the hole (callout 13) in the chassis. Carefully remove the wire-harnesses from the guide in the lower-left corner of the fuser.

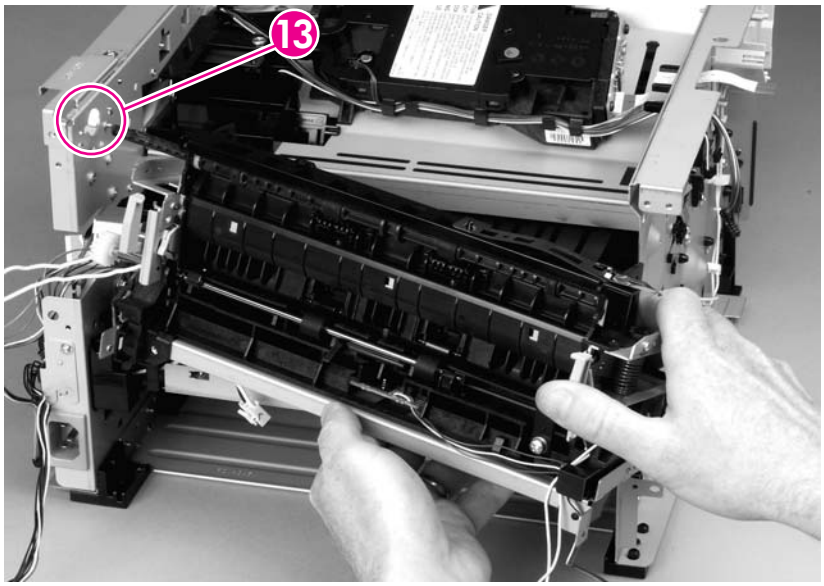

Figure 5-63 Remove the fuser (11 of 11)

Download Free Service Manual and Resetter Printer at http://printer1.blogspot.com

Interlock assembly

1. Remove the following components.
   - Right cover. See Right cover on page 114.
   - Left cover. See Left cover on page 116.
   - Rear cover. See Rear cover on page 120.
   - Top cover. See Top cover on page 122.
2. Remove three screws (callout 1).

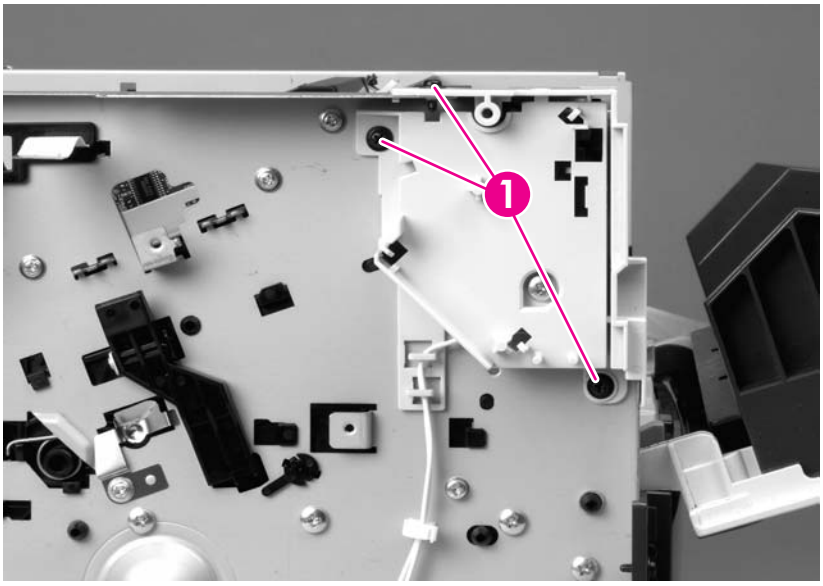

Figure 5-64 Remove the interlock assembly (1 of 2)

3. Lift the interlock assembly away from the all-in-one and disconnect two connectors (callout 2).

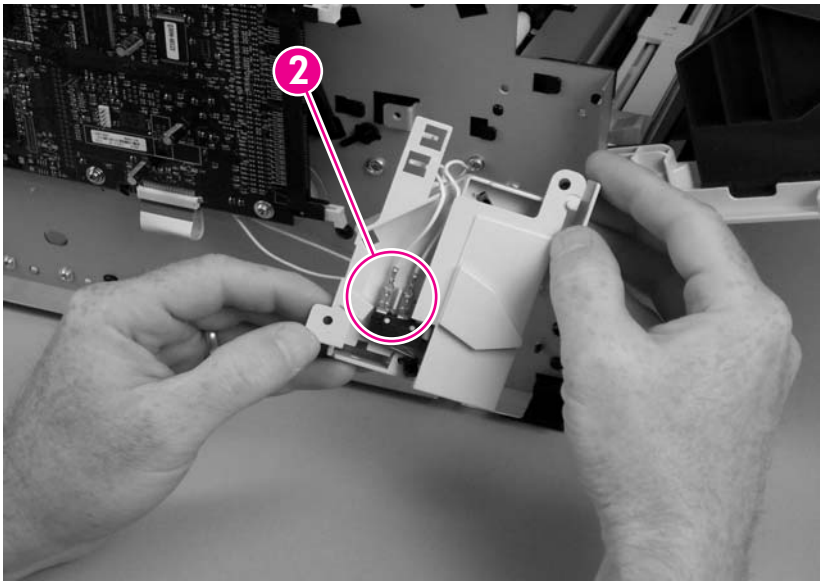

Figure 5-65 Remove the interlock assembly (2 of 2)

Download Free Service Manual and Resetter Printer at http://printer1.blogspot.com

ECU

CAUTION PCAs are sensitive to electrostatic discharge (ESD). Look for the ESD reminder when removing PCAs. Always perform service work at an ESD-protected workstation or mat. If an ESD workstation or mat is not available, ground yourself by touching the sheet-metal chassis *before* touching an ESD-sensitive part.

Protect the ESD-sensitive parts by placing them in ESD pouches when they are out of the all-in-one.

CAUTION Do not bend or fold the flat flexible cables (FFCs) during removal or installation. Also, do not straighten pre-folds in the FFCs. You *must* make sure that all FFCs are fully seated in their connectors. Failure to fully seat an FFC into a connector can cause a short circuit in a PCA.

1. Remove the following components.
   - Right cover. See Right cover on page 114.
   - Left cover. See Left cover on page 116.
   - Rear cover. See Rear cover on page 120.
   - Top cover. See Top cover on page 122.
   - Formatter. See Formatter on page 139.
   - Duplex assembly. See Duplex assembly on page 142.
   - Fan. See Fan on page 148.
   - Duplex-drive gears. See Duplex-drive gears on page 150.
   - Fuser. See Fuser on page 148.
   - Interlock assembly. See Interlock assembly on page 159.

Download Free Service Manual and Resetter Printer at http://printer1.blogspot.com

2. Remove the wire-harnesses from the retainer under the feed plate (callout 1), and then remove the feed plate by lifting it and pulling it straight back.

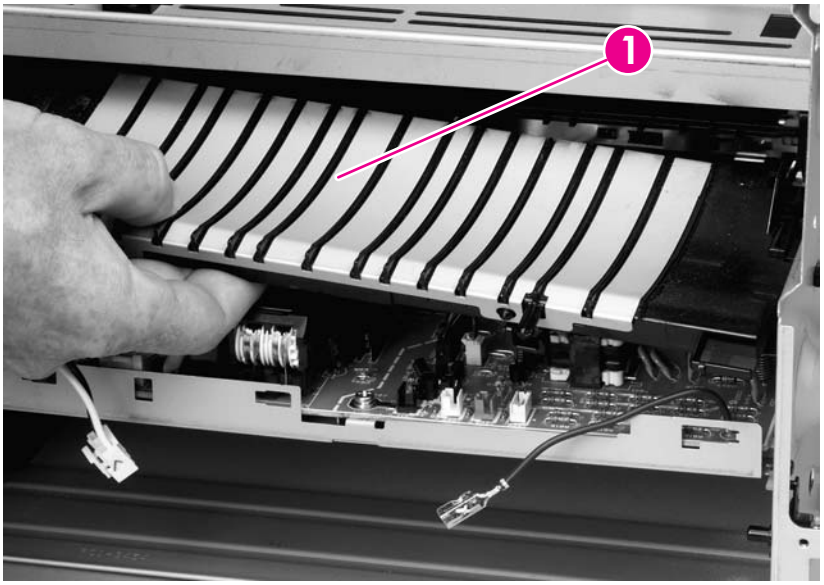

Figure 5-66 Remove the ECU (1 of 8)

3. Disconnect two connectors (callout 2).

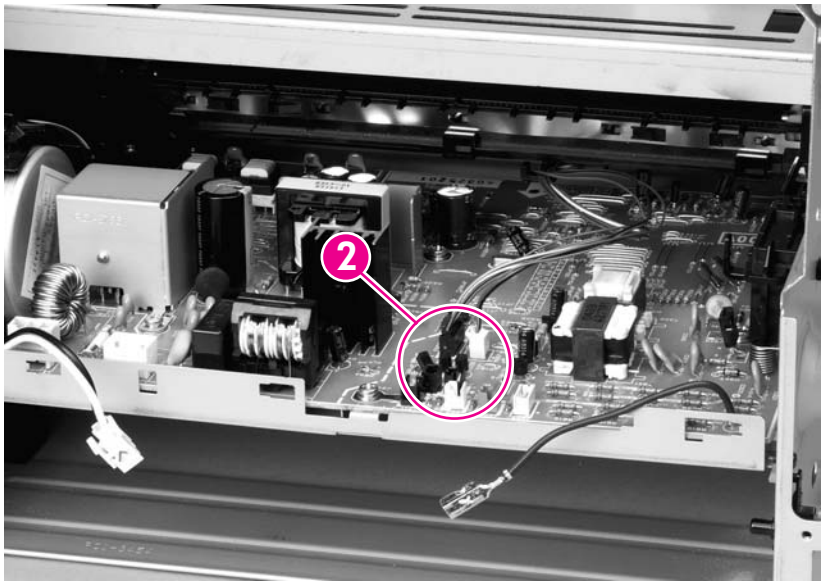

Figure 5-67 Remove the ECU (2 of 8)

Download Free Service Manual and Resetter Printer at http://printer1.blogspot.com

4. Remove the wire-harnesses at the right side of the all-in-one, releasing them from the harness retainers (callout 3).

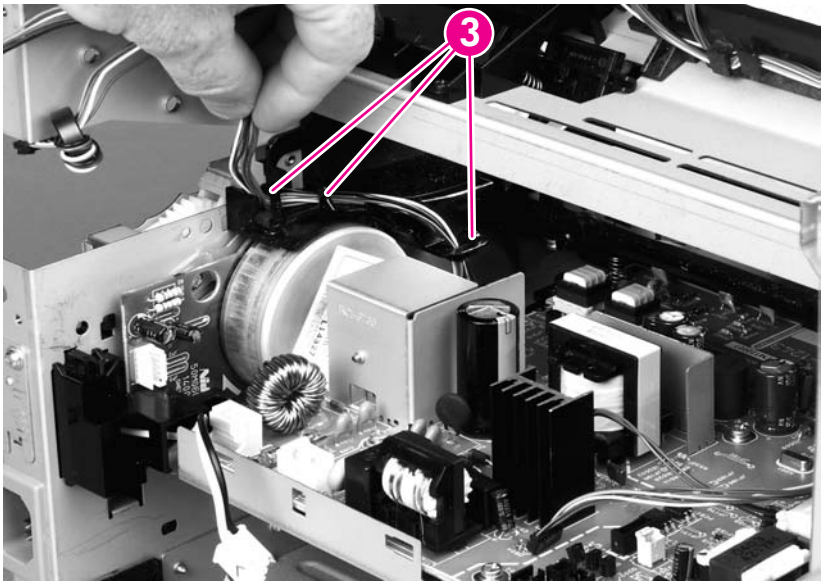

Figure 5-68 Remove the ECU (3 of 8)

5. Remove one screw (callout 4).

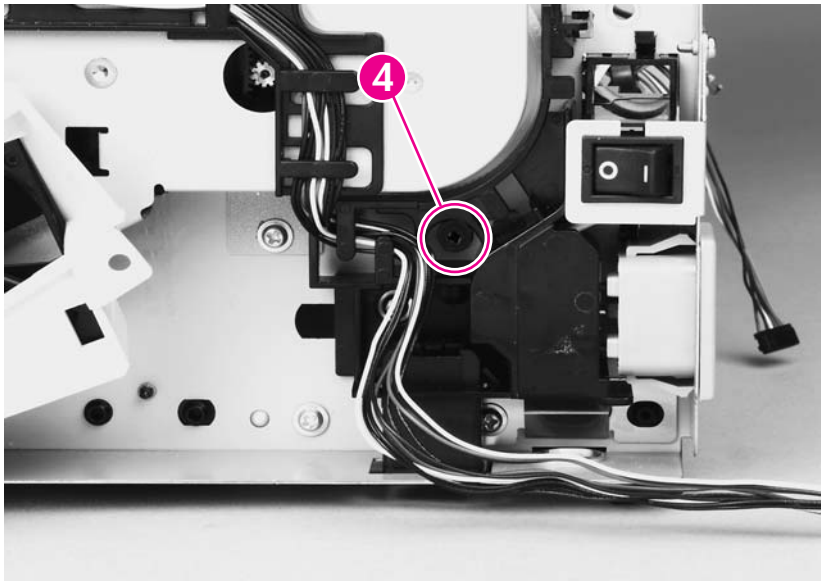

Figure 5-69 Remove the ECU (4 of 8)

Download Free Service Manual and Resetter Printer at http://printer1.blogspot.com

6. Remove two screws (callout 5) from the left side of the all-in-one, and then push the interlock cables and the formatter cable (callout 6) through the hole in the chassis.

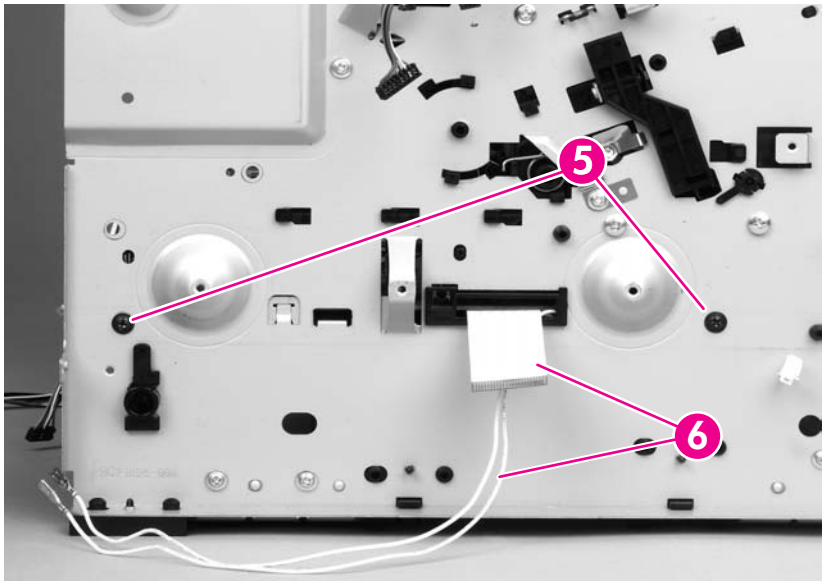

Figure 5-70 Remove the ECU (5 of 8)

7. Spread the all-in-one frame on one side of the all-in-one to release the internal tabs that secure the ECU to the chassis.

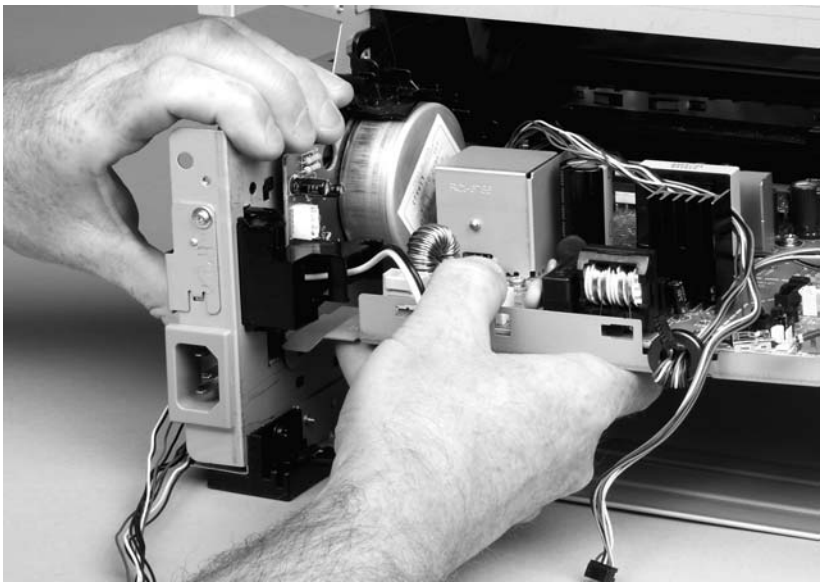

Figure 5-71 Remove the ECU (6 of 8)

Download Free Service Manual and Resetter Printer at http://printer1.blogspot.com

8. Spread the all-in-one frame at the other side of the all-in-one to release the internal tabs, and then lower the ECU slightly and pull it straight back to remove it.

NOTE Make sure that wire-harnesses do not become caught on the contact springs as you remove the ECU.

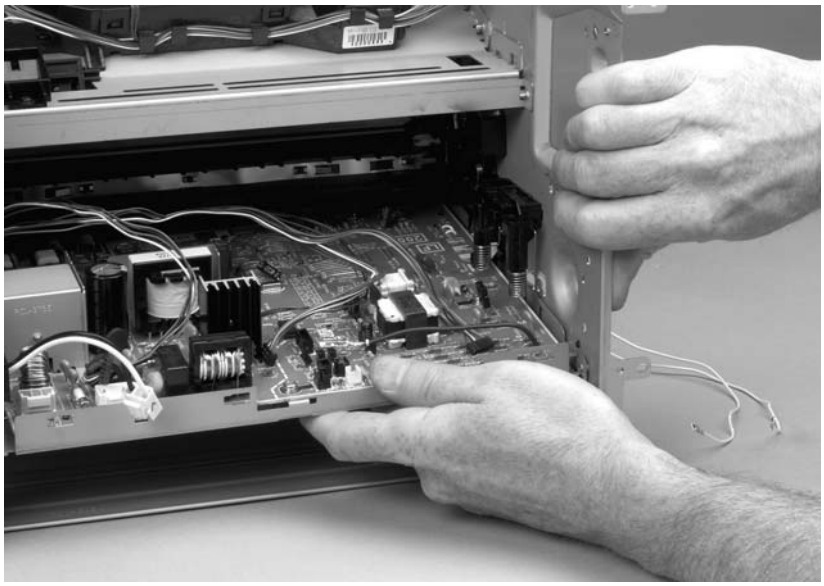

Figure 5-72 Remove the ECU (7 of 8)

Reinstallation tip When replacing the ECU, you might find it easier to find the correct placement of the ECU pan in the all-in-one if you tip the all-in-one so that it rests on its front.

9. Remove four screws (callout 7) and then lift the ECU off of the ECU pan.

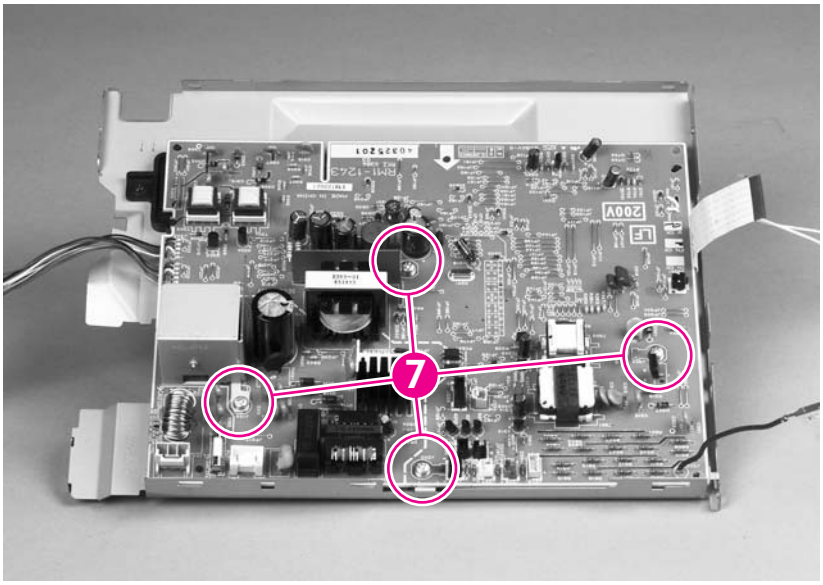

Figure 5-73 Remove the ECU (8 of 8)

Download Free Service Manual and Resetter Printer at http://printer1.blogspot.com

Main motor

1. Remove the following components.
   - Right cover. See Right cover on page 114.
   - Left cover. See Left cover on page 116.
   - Rear cover. See Rear cover on page 120.
   - Top cover. See Top cover on page 122.
   - Formatter. See Formatter on page 139.
   - Fan. See Fan on page 148.
   - Duplex-drive gears. See Duplex-drive gears on page 150.
   - Interlock assembly. See Interlock assembly on page 159.
   - ECU. See ECU on page 160.
2. Remove three screws (callout 1).

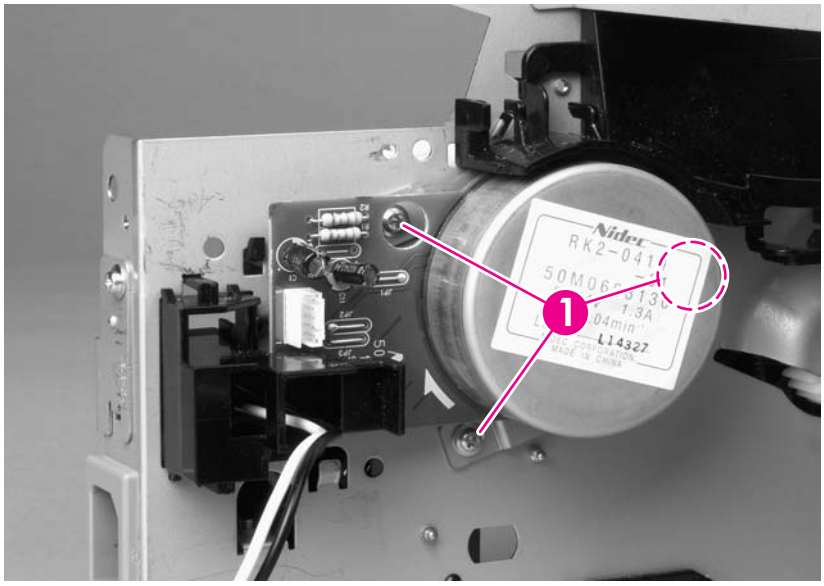

Figure 5-74 Remove the main motor (1 of 2)

Download Free Service Manual and Resetter Printer at http://printer1.blogspot.com

3. Hold the motor while releasing the tabs (callout 2) on the wire-harness guide, and then lift the motor and the guide out of the all-in-one together.

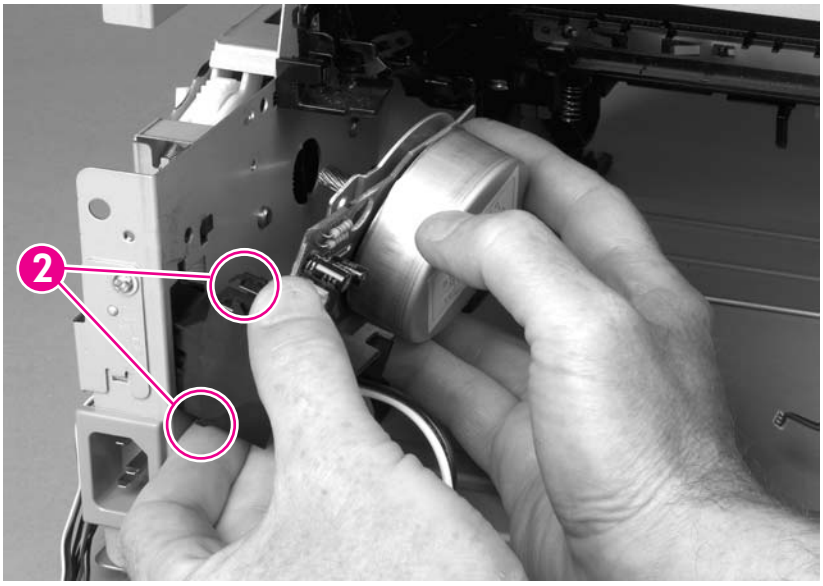

Figure 5-75 Remove the main motor (2 of 2)

Download Free Service Manual and Resetter Printer at http://printer1.blogspot.com

Pickup-and-feed assemblies

This section covers the major assemblies of the pickup-and-feed system: the transfer roller and the registration assembly.

For information about replacing the tray 2 pickup roller, see Replacing the tray 2 pickup roller on page 42.

For information about replacing the tray 2 or tray 3 separation pad, see Replacing the tray 2 and optional tray 3 separation pad on page 47.

For information about replacing the ADF pickup roller, see Replacing the ADF pickup-roller assembly on page 50.

Transfer roller

NOTE Make sure that the transfer roller needs to be replaced before you remove it. Excess handling can cause additional damage.

1. Remove the print cartridge. See Remove the print cartridge on page 113.
2. Use needle-nose pliers to release the transfer roller tabs at the end of the roller, near the right side of the all-in-one.

   CAUTION Do not break the tabs and do not touch the roller.

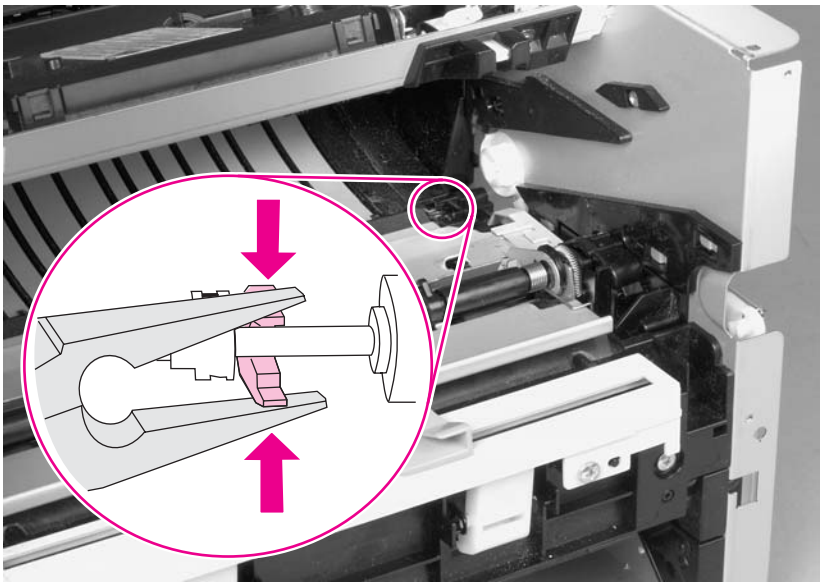

Figure 5-76 Remove the transfer roller

3. Lift up the end of the roller near the right side of the all-in-one, and then slide it toward the right side of the all-in-one while pulling it out of the all-in-one.

Download Free Service Manual and Resetter Printer at http://printer1.blogspot.com

Registration-roller assembly

1. Remove five screws (callout 1).

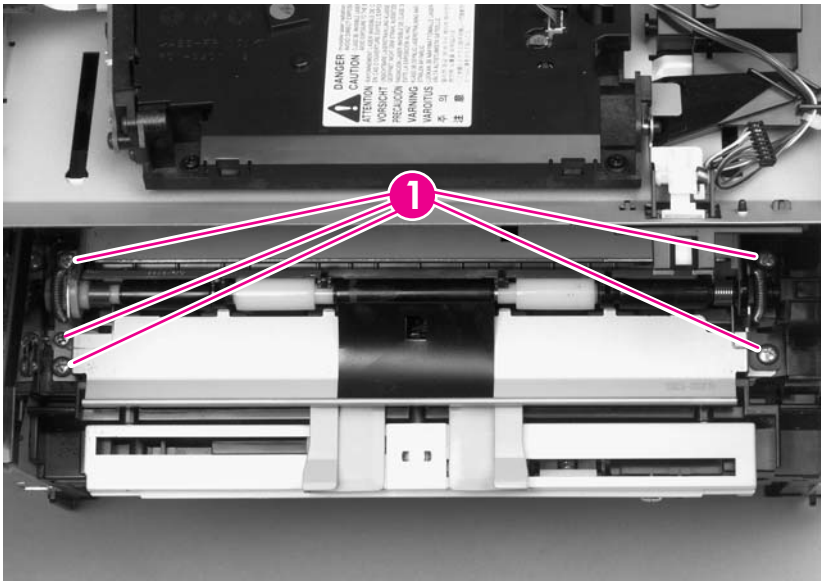

Figure 5-77 Remove the registration-roller assembly

2. Lift the entire assembly out of the all-in-one.

Download Free Service Manual and Resetter Printer at http://printer1.blogspot.com

Main gear assembly and tray 2 pickup solenoid

1. Remove the following components.
   - Right cover. See Right cover on page 114.
   - Left cover. See Left cover on page 116.
   - Rear cover. See Rear cover on page 120.
   - Top cover. See Top cover on page 122.
   - Convenience-stapler power supply (HP LaserJet 3392 only). See Convenience-stapler power supply (HP LaserJet 3392 only) on page 132.
   - Convenience-stapler power supply bracket and strap (HP LaserJet 3392 only). See Convenience-stapler power supply bracket and strap (HP LaserJet 3392 only) on page 135.
   - Power switch PCA. See Power-switch PCA on page 138.
   - Fan. See Fan on page 148.
2. Disconnect one connector (callout 1) at the ECU.

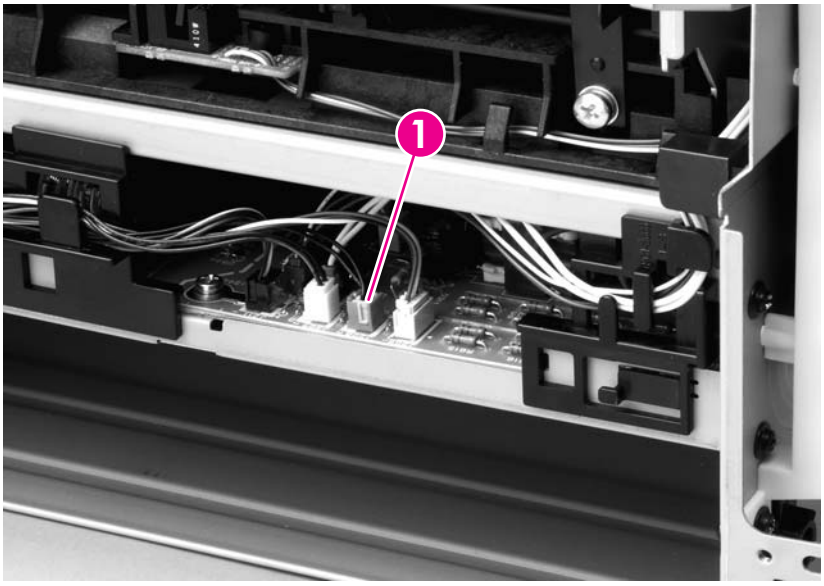

Figure 5-78 Remove the main gear assembly (1 of 3)

Download Free Service Manual and Resetter Printer at http://printer1.blogspot.com

3. Squeeze the retainer tabs on the gear-release lever to disconnect the lever from the print-cartridge door arm.

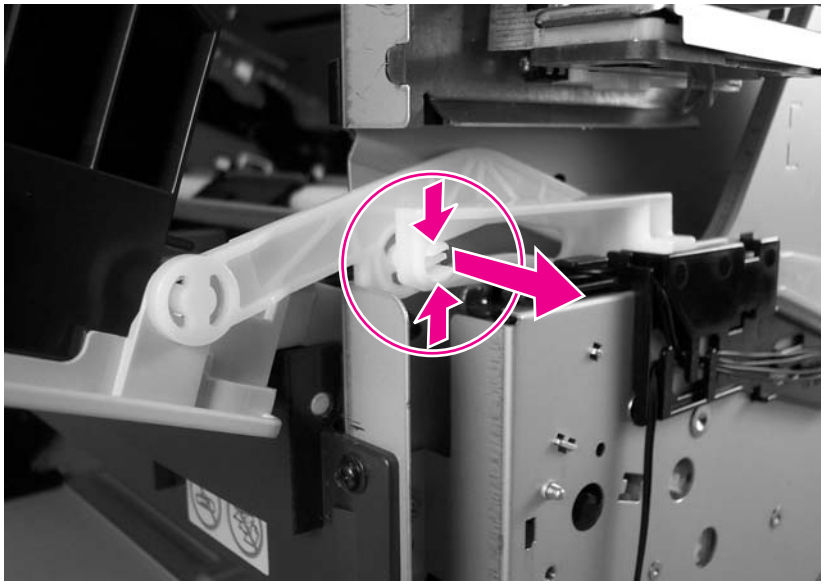

Figure 5-79 Remove the main gear assembly (2 of 3)

4. Release the tab on the gear (callout 2) and slide the gear off of the shaft.
5. Remove the wire-harnesses from the guide (callout 3).
6. Remove four screws (callout 4).

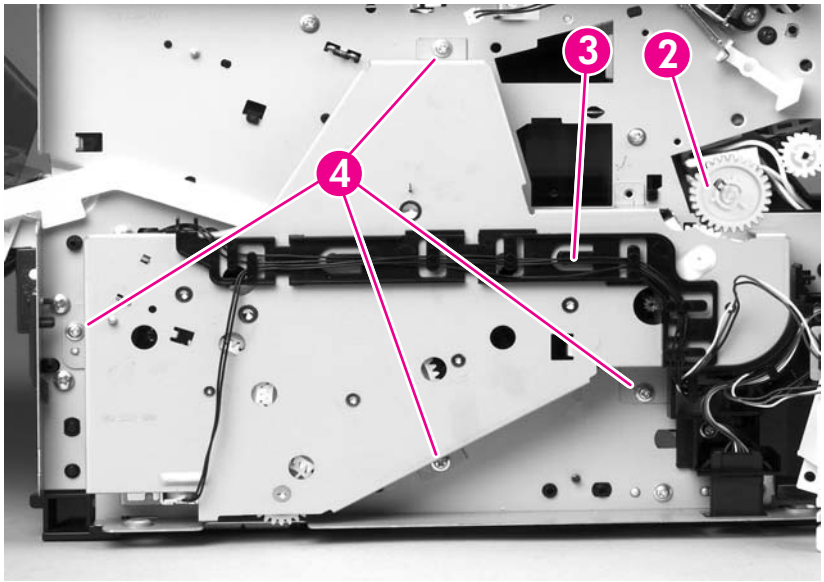

Figure 5-80 Remove the main gear assembly (3 of 3)

7. Pull the main gear assembly straight away from the all-in-one.

Download Free Service Manual and Resetter Printer at http://printer1.blogspot.com

8. To remove the tray 2 pickup solenoid, disconnect one connector (callout 5).

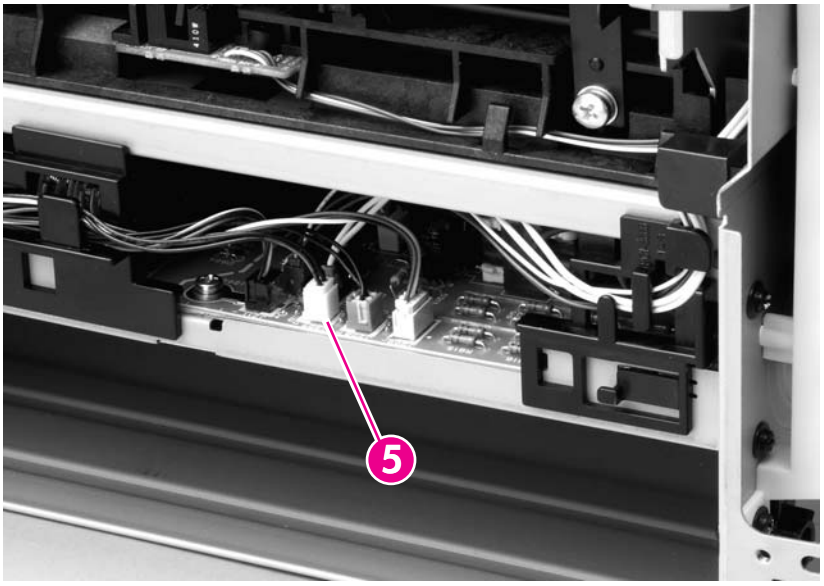

Figure 5-81 Remove the tray 2 pickup solenoid (1 of 2)

9. Remove one screw (callout 6), and then lift the solenoid off of the all-in-one.

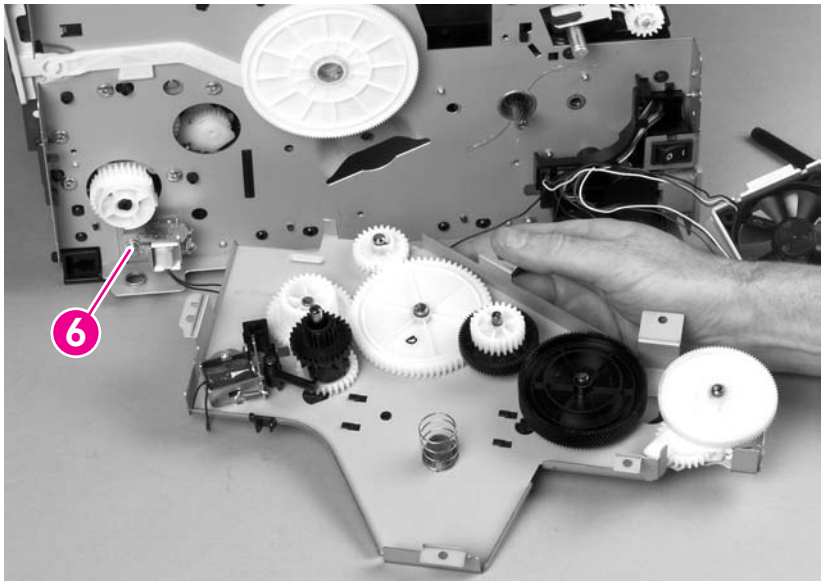

Figure 5-82 Remove the tray 2 pickup solenoid (2 of 2)

Download Free Service Manual and Resetter Printer at http://printer1.blogspot.com

Download Free Service Manual and Resetter Printer at http://printer1.blogspot.com

6 Troubleshooting

- Troubleshooting process
- Jams
- Control-panel messages
- Print problems
- Fax problems
- Copy problems
- Scan problems
- Control-panel display problems
- Convenience-stapler problems (HP LaserJet 3392 only)
- DSL problems
- ADF problems
- Functional checks
- Service-mode functions
- Troubleshooting tools
- Firmware updates and recovery

Download Free Service Manual and Resetter Printer at http://printer1.blogspot.com

Troubleshooting process

Troubleshooting checklist

Follow these steps when trying to solve a problem with the all-in-one.

Step number	Verification step	Possible problems	Solutions
1	**Is the power on?** When the all-in-one is connected to a grounded power source and is turned on, the control panel shows **Hewlett Packard** with moving cursors indicating that the firmware code is loading, and the main motor rotates for approximately 45 to 60 seconds. When the firmware is done loading, **Scanner bulb warming up** might appear on the control-panel display, and the scan head moves back and forth for 10 to 15 seconds. If you lift the scanner cover, you will see that the scanner bulb is lit. Near the end of this time, the automatic document feeder (ADF) motor turns on for about two seconds.	No power as a result of a failed power source, cable, switch, or fuse	1. Verify that the all-in-one is plugged in. 2. Verify that the power cable is functional and that the power switch is on. 3. Check the power source by plugging the all-in-one directly into the wall or into a different outlet.
		Motor does not start	1. Verify that the all-in-one is plugged into a working electrical receptacle. 2. Verify that the print cartridge is installed correctly. Follow the instructions on the control panel to remove and replace the cartridge. 3. Verify that the top cover is closed.
		ADF motor does not start	Open the ADF cover and remove any orange shipping tape inside the ADF. Verify that the ADF connector is connected correctly to the scanner. If the ADF motor still does not rotate, replace the ADF. See ADF assembly on page 124.
		Scanner bulb does not light	If the scanner bulb does not light, verify that the wire-harness connectors from the scanner to the formatter are connected correctly. If the error persists, replace the following components one at a time until the problem is resolved: scanner assembly, formatter. See Scanner assembly on page 126 and Formatter on page 139.
2	**Does Ready appear in the all-in-one control panel?** The control panel should function without error messages.	Control panel shows an error	See Control-panel messages on page 203 for a list of common messages that will help you correct the error.
3	**Do information pages print?** Print a Configuration page.	Error message appears on the control-panel display	See Control-panel messages on page 203 for a list of common messages that will help you correct the error.
		Media does not move smoothly through the all-in-one paper path	Make sure that media that meets HP specifications. See Media specifications on page 16.

Download Free Service Manual and Resetter Printer at http://printer1.blogspot.com

Step number	Verification step	Possible problems	Solutions
			Clean the paper path. See Cleaning the all-in-one on page 56.
		Poor print quality	See Print-quality problems on page 211.
4	**Does the all-in-one copy?** Place the Configuration page into the ADF and make a copy. The report should feed smoothly through the ADF, and copies should print without print-quality problems. Make a copy from the flatbed as well.	Poor copy quality from the ADF	1. If the print quality from the internal tests and the copy from the flatbed are acceptable, clean the ADF scanning strip. See Cleaning the all-in-one on page 56. 2. If the ADF is damaged, replace the ADF. See ADF assembly on page 124.
		Media does not move smoothly through the ADF path	1. Make sure that the media in the ADF meets ADF specifications. 2. Clean the ADF pick roller. See Cleaning the all-in-one on page 56. 3. If the problem persists, replace the ADF pick roller. See Replacing the ADF pickup-roller assembly on page 50. 4. If the problem persists, replace the ADF. See ADF assembly on page 124.
		Poor copy quality from the flatbed	If the print quality from the internal tests and the copy from the ADF are acceptable, clean the flatbed glass. See Cleaning the all-in-one on page 56.
5	**Does the all-in-one send a fax?** Connect the telephone line and press Start Fax to verify that a dial tone exists (using a hand set, if necessary). Attempt to send a fax.	Telephone line is not operational or the all-in-one is not plugged into the telephone line	Verify that the all-in-one is plugged into a telephone line that you know works.
		Telephone cord is faulty or is plugged into the wrong connector	1. Try plugging the telephone cord into the other connector. 2. Try a new telephone cord.
		Fax number is incorrect or incomplete	Check the fax number and retype the correct and complete fax number.
		All-in-one fax settings are set incorrectly	Review and reset the all-in-one fax settings.
6	**Does the all-in-one receive a fax?** Use another fax machine to send a fax to the all-in-one.	Too many telephone devices are plugged in, or telephone devices are not connected in the correct order	Make sure that the all-in-one is the only device on the telephone line and try again to receive the fax.
		All-in-one fax settings are set incorrectly	Review and reset the all-in-one fax settings. **NOTE** If the all-in-one is connected to a computer, use the HP Fax Setup Wizard to review and reset fax settings.
7	**Does the all-in-one print from the computer?**	Software is not installed correctly or an error occurred during software installation	Uninstall and then reinstall the all-in-one software. Verify that you are using the correct installation procedure and the correct port setting.

Download Free Service Manual and Resetter Printer at http://printer1.blogspot.com

Step number	Verification step	Possible problems	Solutions
	Connect the network cable or USB cable to the all-in-one and the computer. Use a word-processing program to send a print job to the all-in-one.	The cable is not connected correctly	Reconnect the cable.
		Incorrect driver is selected	Select the correct driver.
		Other devices are connected to the USB port	Disconnect the other devices and try again to print.
		There might be a problem with the network connection.	If printing through the network, verify that the device has a valid TCP/IP address by checking the network configuration. If the issue persists, verify that the green LED on the network connector on the back of the device is lit. If it is not lit, there might be a bad network connection, cable, or network device (router or hub). If the issue persists after verifying the above, uninstall and then reinstall the network driver software from the device installation CD. Print a Configuration page for reference to the TCP/IP address during reinstallation. If the problem still persists, replace the formatter.
		Port driver problem in Microsoft Windows	Uninstall and then reinstall the all-in-one software. Verify that you are using the correct installation procedure and the correct port setting.
8	**Does the all-in-one scan to the computer?** Turn the all-in-one off, and then on. Initiate a scan from the basic desktop software at your computer.	Cable is not connected correctly	Reconnect the cable.
		Software is not installed correctly or an error occurred during software installation	Uninstall and then reinstall the all-in-one software. Verify that you are using the correct installation procedure and the correct port setting.

Download Free Service Manual and Resetter Printer at http://printer1.blogspot.com

Jams

Causes of jams

NOTE If you are experiencing jams in the duplex paper path, make sure that the duplex-tray lever is set to the correct media size for your country/region. Open the duplex-paper-path door and look at the embossed arrow on the lever. Make sure that it points to the media size for your country/region. If the size needs to be changed, push the lever all the way in for duplex printing on letter- and legal-size media, or pull it all the way out for duplex printing on A4-size media.

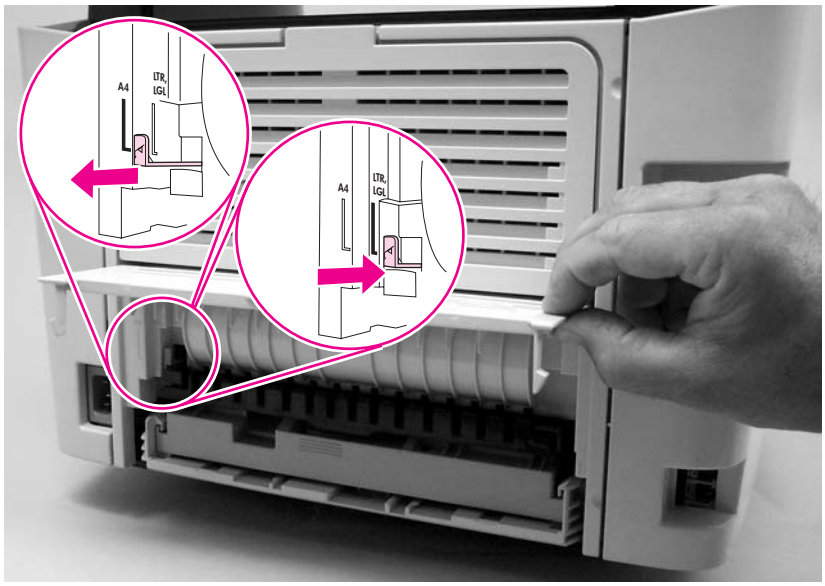

Occasionally, paper or other print media can become jammed during a print job. Some causes include the following events:

- The print media that is being used does not meet HP specifications.
- The media is damaged or has objects attached to it, such as staples or paper clips.
- The environment in which the print media was stored is too humid or too dry.
- The input trays are loaded incorrectly or overfilled, or the media guides are not set correctly.
- Too many sheets have accumulated in an output area, or sheets are blocking an output area.
- Media is added to or removed from an input tray during a print job or an input tray is removed from the all-in-one during a print job.
- The cartridge door is opened during a print job.

Tips to avoid jams

- Use only HP-recommended media types and sizes.
- Verify that the input tray is not overfilled. The input tray capacity varies depending on the type of print media that you are using.
- Verify that the media guides are correctly adjusted.

Download Free Service Manual and Resetter Printer at http://printer1.blogspot.com

- Check that the input tray is securely in place.
- Do not let print media stack up in the output bin. The print media type and the amount of toner used affect the output bin capacity.
- Do not add print media into the input tray while the all-in-one is printing.
- Do not open the print cartridge door during printing.
- Check the power connection. Make sure that the power cord is firmly connected to both the all-in-one and the power-supply box. Plug the power cord into a grounded electrical outlet.

Where to look for jams

Jams can occur in these locations:

- Inside the all-in-one
- In output areas
- In the automatic document feeder (ADF)
- In the automatic duplexer

Find and remove the jam by using the instructions on the following pages. If the location of the jam is not obvious, first look inside the all-in-one.

Loose toner might remain in the all-in-one after a jam. This problem typically resolves itself after a few sheets have printed.

Download Free Service Manual and Resetter Printer at http://printer1.blogspot.com

Jams in the print-cartridge area

To clear a jam in the print cartridge area, perform the following steps:

CAUTION Do not use sharp objects, such as tweezers or needle-nose pliers, to remove jams. Damage caused by sharp objects is not covered by the warranty.

When removing jammed media, pull the jammed media straight away from the all-in-one. Pulling jammed media out of the all-in-one at an angle can damage the all-in-one.

1. Open the print-cartridge door, and remove the print cartridge.

   CAUTION To prevent damage to the print cartridge, minimize its exposure to direct light.

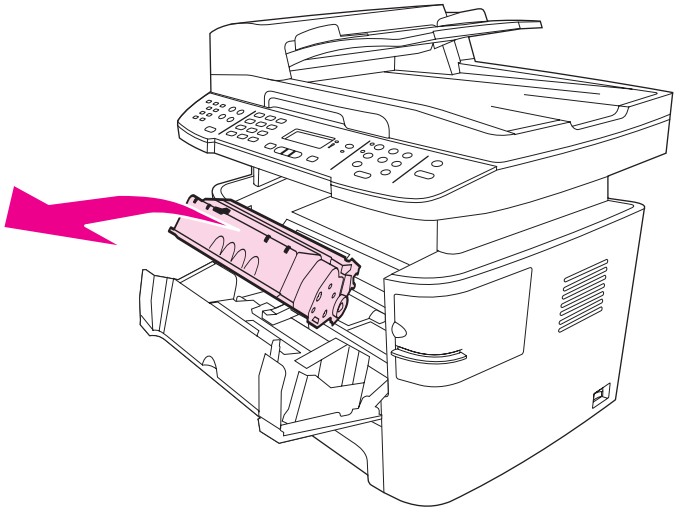

Figure 6-1 Jams in the print-cartridge area (1 of 5)

Download Free Service Manual and Resetter Printer at http://printer1.blogspot.com

2. On the HP LaserJet 3390/3392 all-in-one, open the rear output door, and then rotate the green pressure-release levers downward.

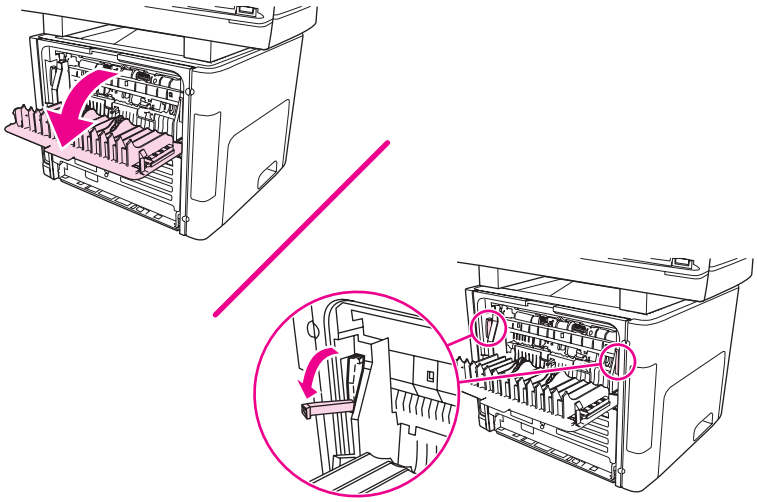

Figure 6-2 Jams in the print-cartridge area (2 of 5)

3. With both hands, grasp the portion of the media that is the most visible (this includes the middle), and carefully pull it free from the all-in-one.

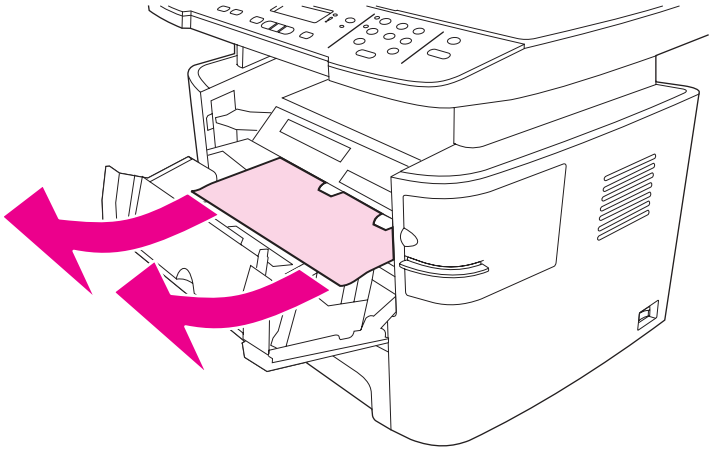

Figure 6-3 Jams in the print-cartridge area (3 of 5)

Download Free Service Manual and Resetter Printer at http://printer1.blogspot.com

4. Replace the print cartridge and close the print-cartridge door.

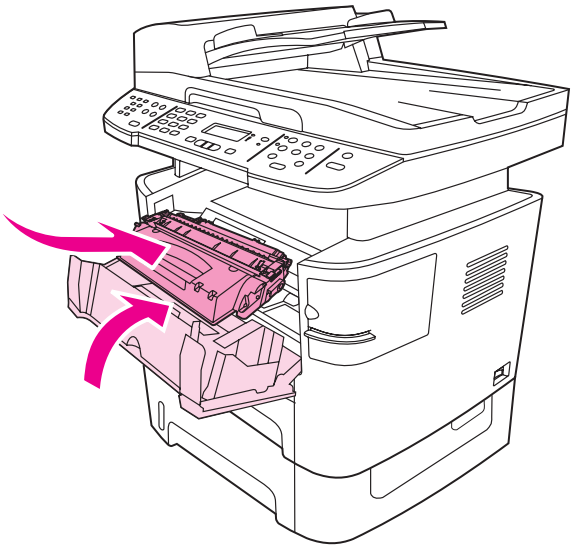

Figure 6-4 Jams in the print-cartridge area (4 of 5)

5. Close the rear output door.

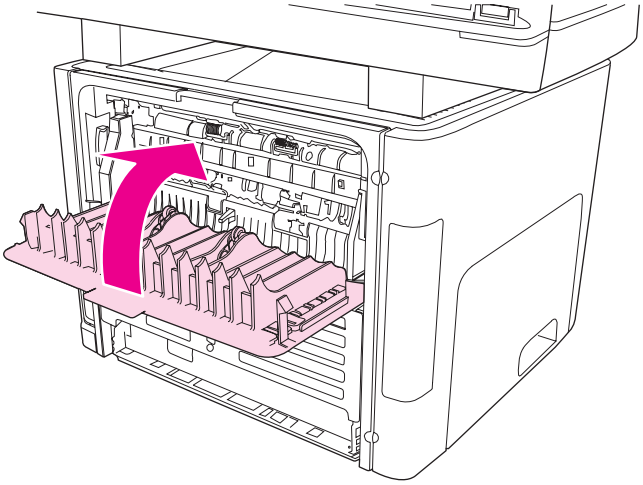

Figure 6-5 Jams in the print-cartridge area (5 of 5)

Jams in the trays

To clear a jam in the tray, perform the following steps:

Download Free Service Manual and Resetter Printer at http://printer1.blogspot.com

CAUTION Do not use sharp objects, such as tweezers or needle-nose pliers, to remove jams. Damage caused by sharp objects is not covered by the warranty.

When removing jammed media, pull the jammed media straight away from the all-in-one. Pulling jammed media out of the all-in-one at an angle can damage the all-in-one.

1. Open the rear output door.

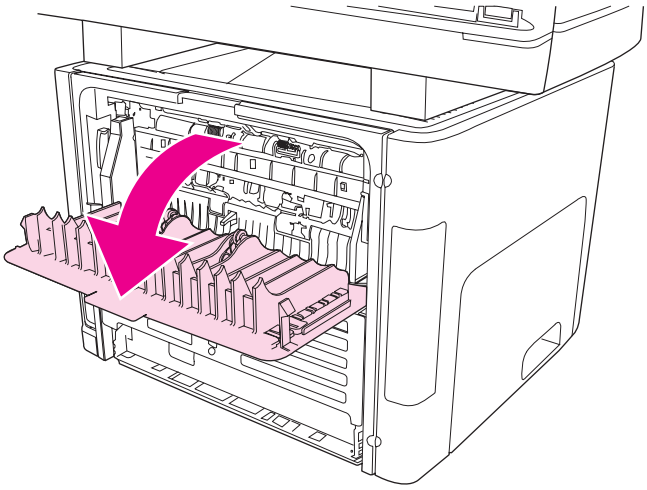

Figure 6-6 Jams in the trays (1 of 10)

2. Rotate the green pressure-release levers downward.

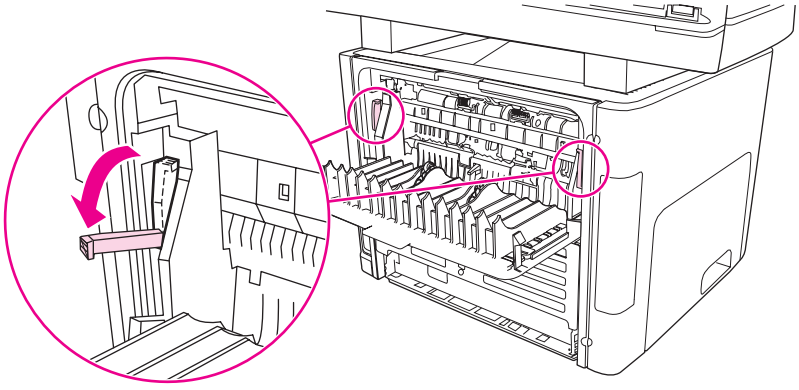

Figure 6-7 Jams in the trays (2 of 10)

Download Free Service Manual and Resetter Printer at http://printer1.blogspot.com

3. Open the single-sheet priority input slot (tray 1).

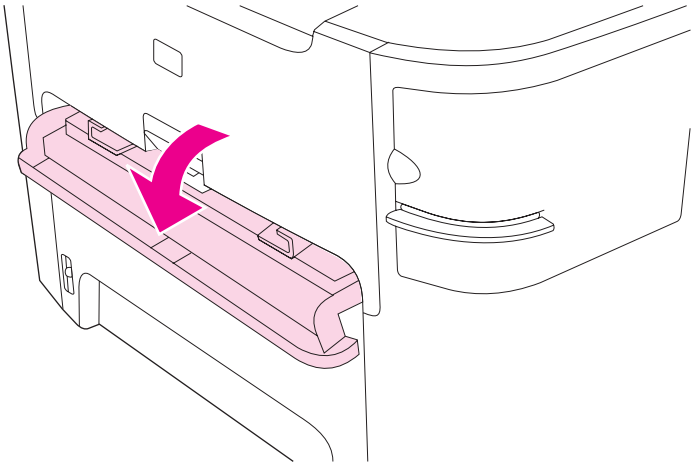

Figure 6-8 Jams in the trays (3 of 10)

4. If jammed media is visible, with both hands grasp the portion of the media that is the most visible (this includes the middle), and carefully pull it free from the all-in-one.

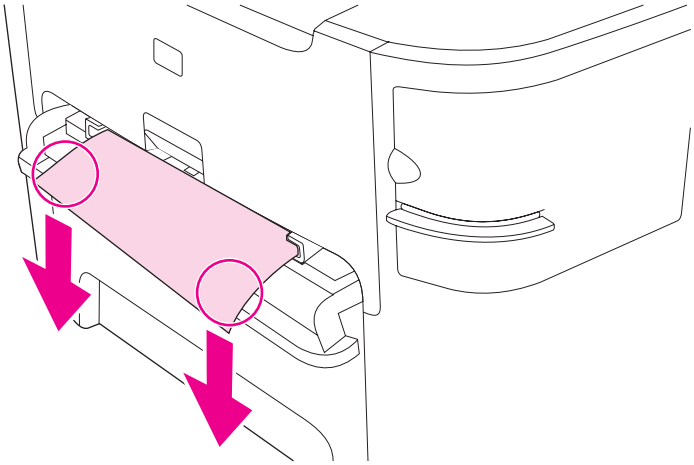

Figure 6-9 Jams in the trays (4 of 10)

Download Free Service Manual and Resetter Printer at http://printer1.blogspot.com

5. Close the single-sheet priority input slot (tray 1).

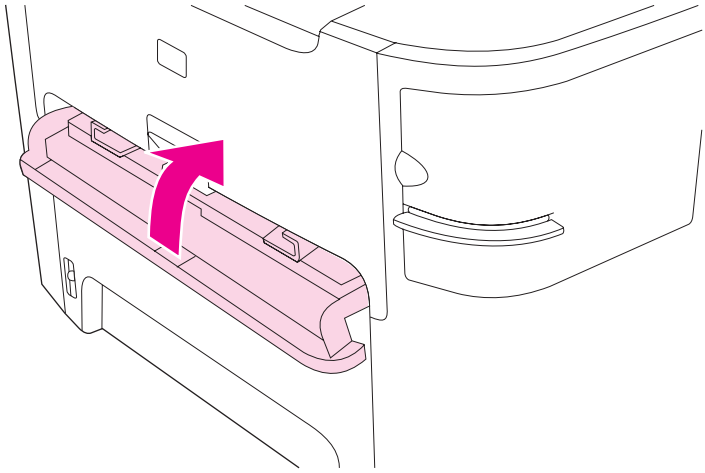

Figure 6-10 Jams in the trays (5 of 10)

6. Remove the tray 2 or tray 3 cassette.

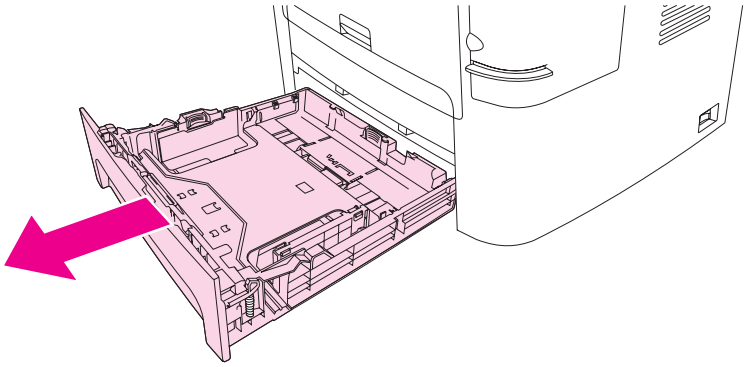

Figure 6-11 Jams in the trays (6 of 10)

Download Free Service Manual and Resetter Printer at http://printer1.blogspot.com

7. If jammed media is visible, use both hands to grasp the portion of the media that is the most visible (this includes the middle), and carefully pull it free from the all-in-one.

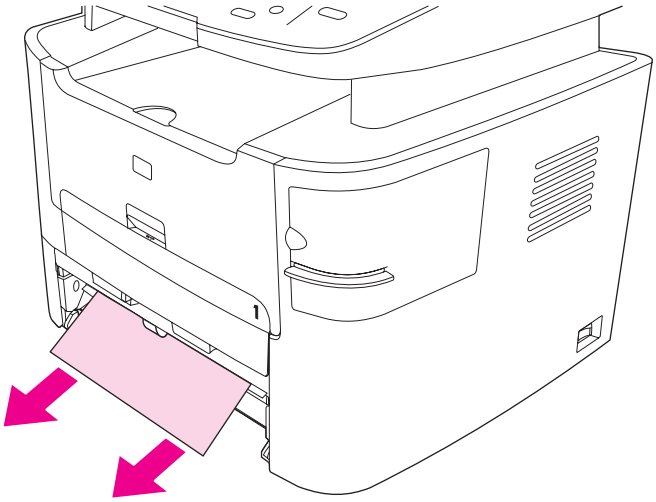

Figure 6-12 Jams in the trays (7 of 10)

8. If no media is visible, open the print-cartridge door, remove the print cartridge, and rotate the upper media guide. Carefully pull the media up and out of the all-in-one.

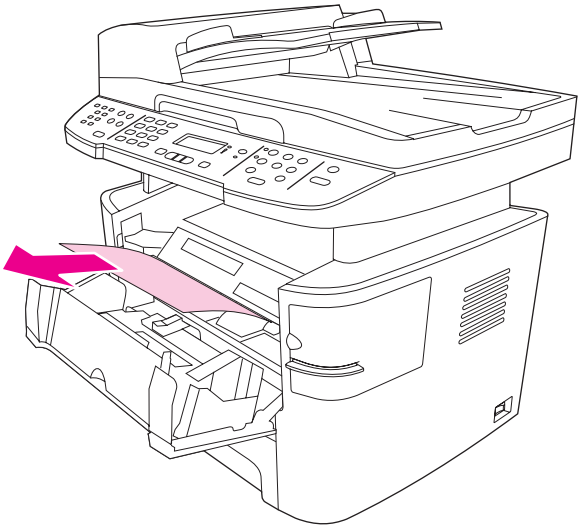

Figure 6-13 Jams in the trays (8 of 10)

Download Free Service Manual and Resetter Printer at http://printer1.blogspot.com

9. Replace the tray 2 or tray 3 cassette.

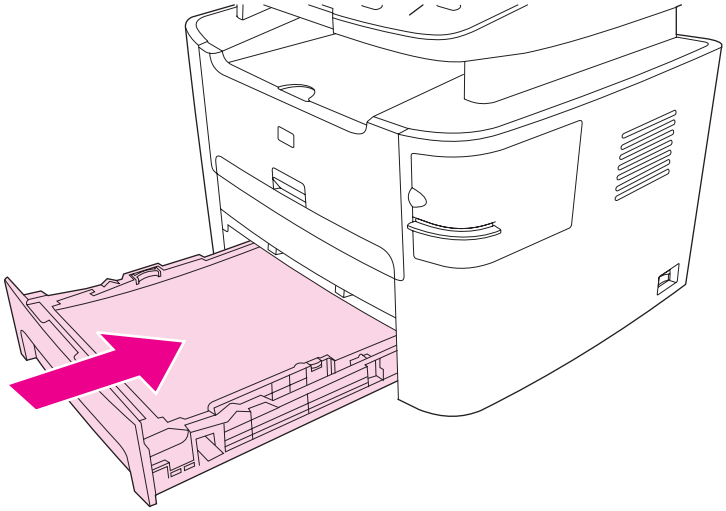

Figure 6-14 Jams in the trays (9 of 10)

10. Close the rear output door.

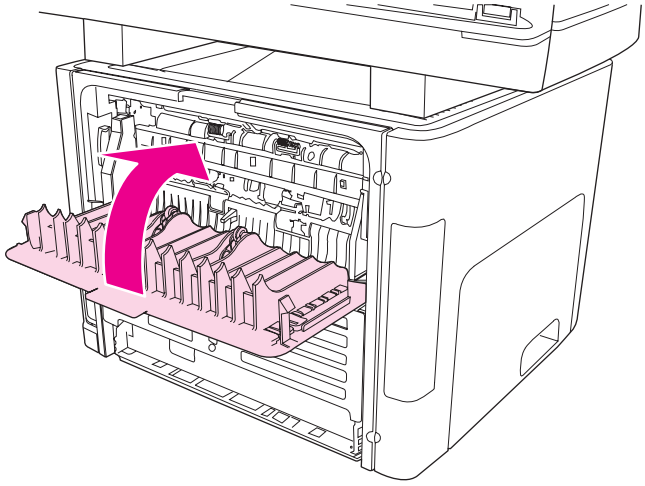

Figure 6-15 Jams in the trays (10 of 10)

Download Free Service Manual and Resetter Printer at http://printer1.blogspot.com

Jams in the output bin

CAUTION Do not use sharp objects, such as tweezers or needle-nose pliers, to remove jams. Damage caused by sharp objects is not covered by the warranty.

When removing jammed media, pull the jammed media straight away from the all-in-one. Pulling jammed media out of the all-in-one at an angle can damage the all-in-one.

With both hands, grasp the portion of the media that is the most visible (this includes the middle), and carefully pull it free from the all-in-one.

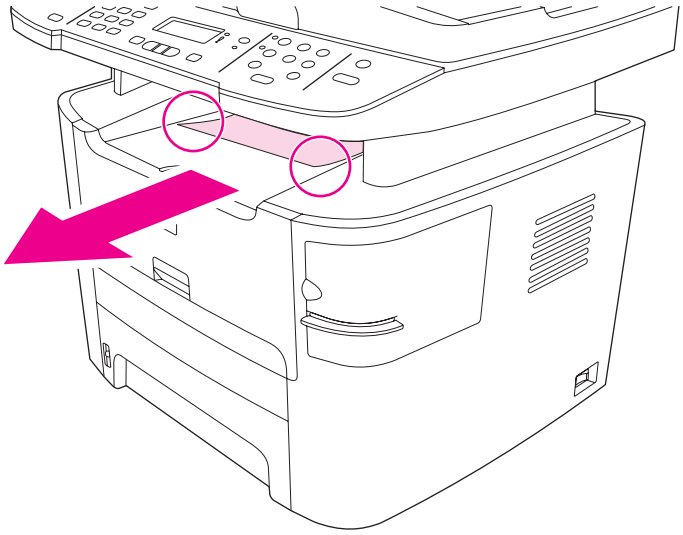

Figure 6-16 Jams in the output bin

Download Free Service Manual and Resetter Printer at http://printer1.blogspot.com

Jams in the straight-through output path

CAUTION Do not use sharp objects, such as tweezers or needle-nose pliers, to remove jams. Damage caused by sharp objects is not covered by the warranty.

When removing jammed media, pull the jammed media straight away from the all-in-one. Pulling jammed media out of the all-in-one at an angle can damage the all-in-one.

1. Open the rear output door.

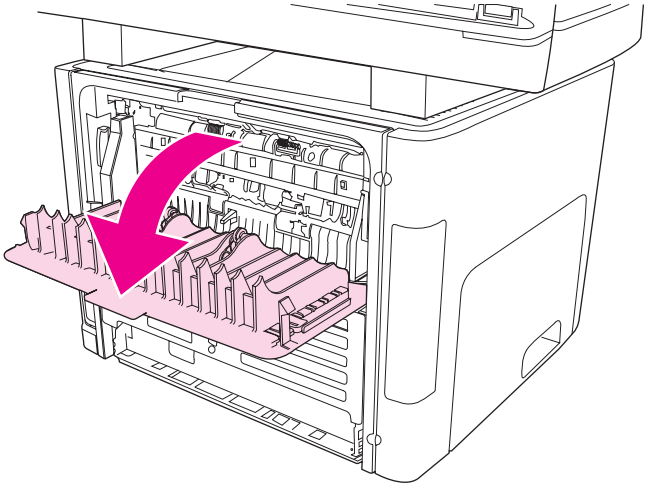

Figure 6-17 Jams in the straight-through output path (1 of 4)

2. Rotate the green pressure release levers downward.

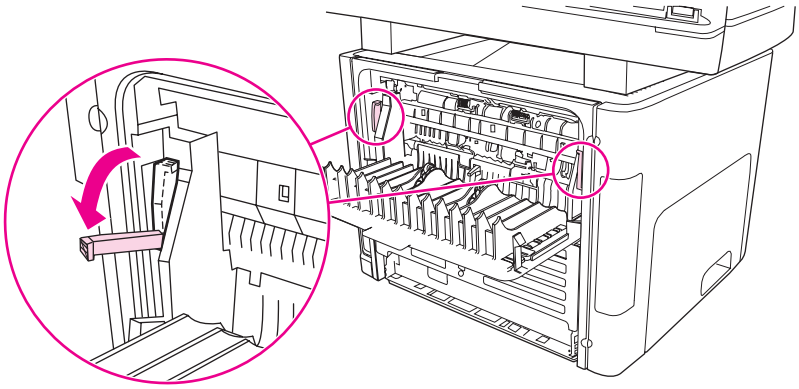

Figure 6-18 Jams in the straight-through output path (2 of 4)

Download Free Service Manual and Resetter Printer at http://printer1.blogspot.com

3. With both hands, grasp the portion of the media that is the most visible (this includes the middle), and carefully pull it free from the all-in-one.

NOTE If you cannot grasp the media with your hands, perform the procedure in Jams in the print-cartridge area on page 179.

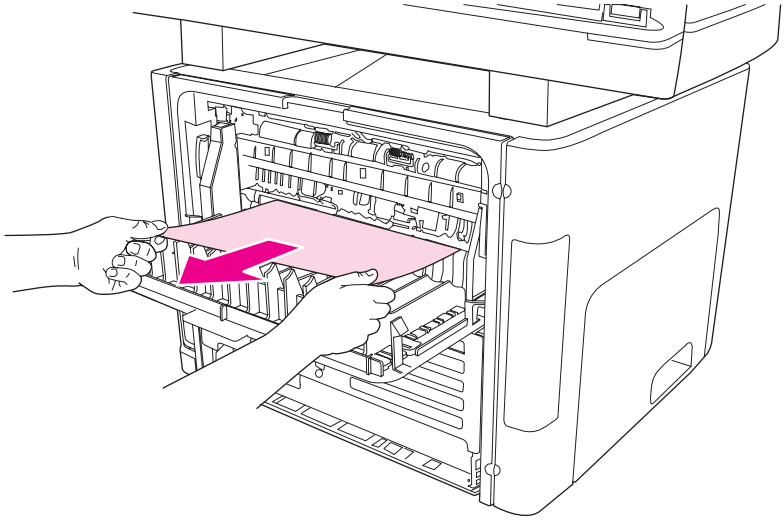

Figure 6-19 Jams in the straight-through output path (3 of 4)

4. Close the rear output door.

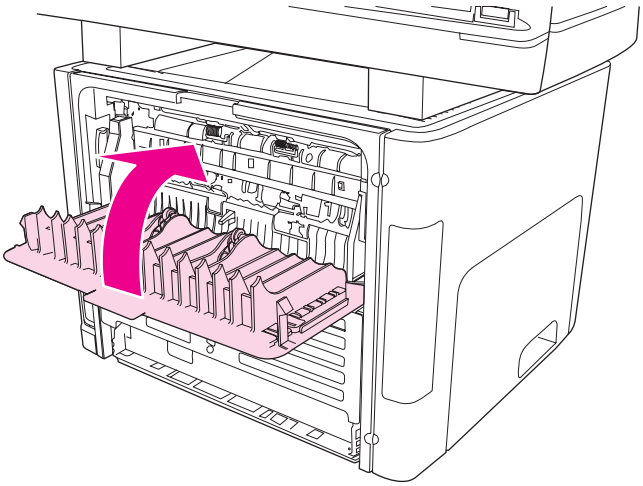

Figure 6-20 Jams in the straight-through output path (4 of 4)

Download Free Service Manual and Resetter Printer at http://printer1.blogspot.com

Jams in the duplex path

NOTE If you are experiencing jams in the duplex paper path, make sure that the duplex-tray lever is set to the correct media size for your country/region. Open the duplex-paper-path door and look at the embossed arrow on the lever. Make sure that it points to the media size for your country/region. If the size needs to be changed, push the lever all the way in for duplex printing on letter- and legal-size media, or pull it all the way out for duplex printing on A4-size media.

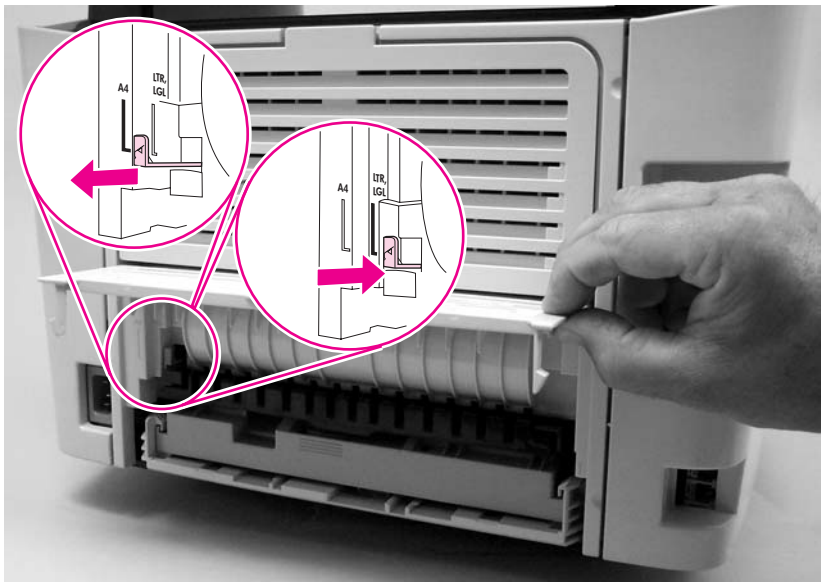

CAUTION Do not use sharp objects, such as tweezers or needle-nose pliers, to remove jams. Damage caused by sharp objects is not covered by the warranty.

When removing jammed media, pull the jammed media straight away from the all-in-one. Pulling jammed media out of the all-in-one at an angle can damage the all-in-one.

1. Open the rear output door.

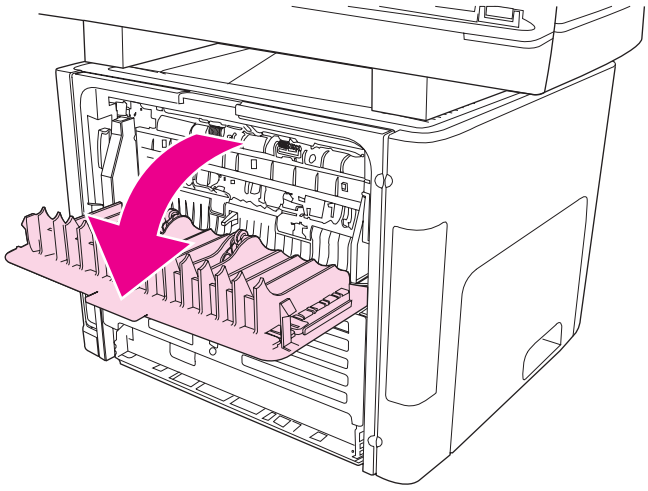

Figure 6-21 Jams in the duplex path (1 of 10)

Download Free Service Manual and Resetter Printer at http://printer1.blogspot.com

2. Rotate the green pressure-release levers downward.

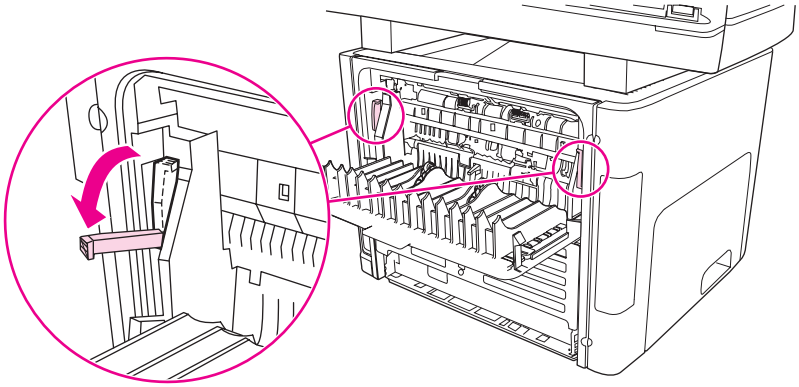

Figure 6-22 Jams in the duplex path (2 of 10)

3. Remove the tray 2 cassette.

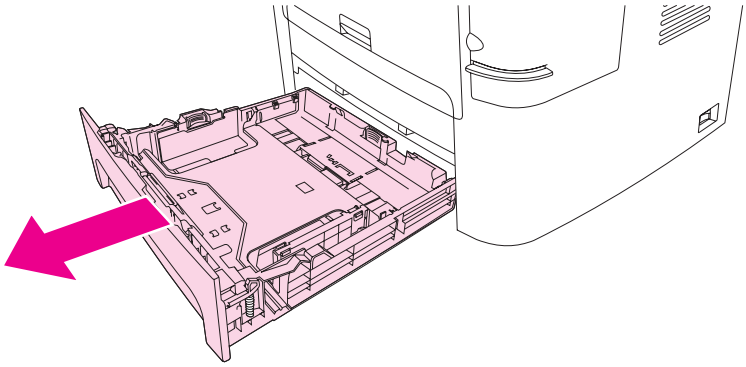

Figure 6-23 Jams in the duplex path (3 of 10)

Download Free Service Manual and Resetter Printer at http://printer1.blogspot.com

4. Push down on the green lever on the duplex assembly.

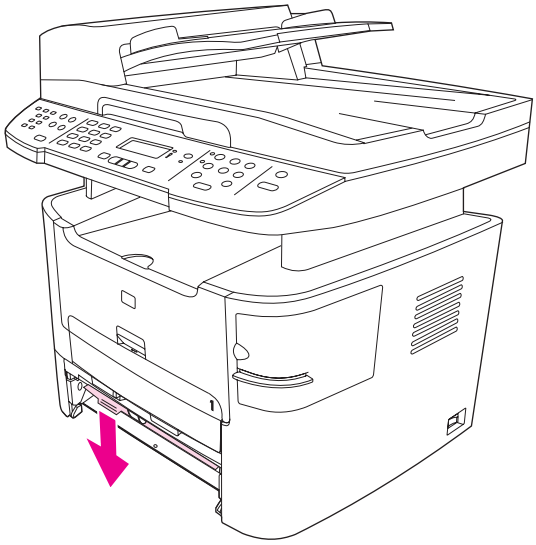

Figure 6-24 Jams in the duplex path (4 of 10)

5. With both hands, grasp the portion of the media that is the most visible (this includes the middle), and carefully pull it free from the all-in-one.

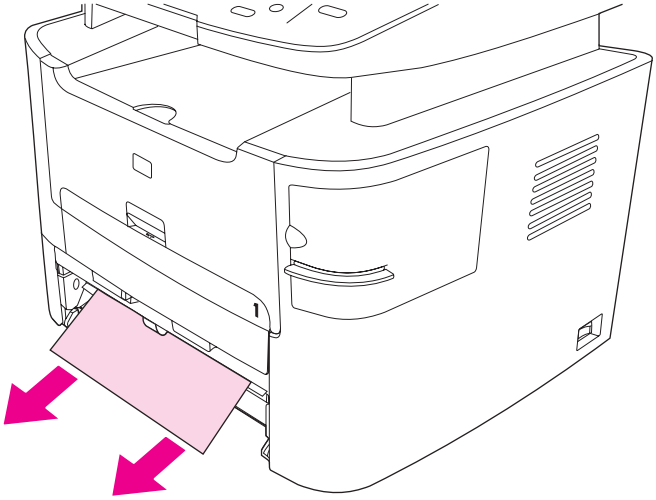

Figure 6-25 Jams in the duplex path (5 of 10)

Download Free Service Manual and Resetter Printer at http://printer1.blogspot.com

6. Close the duplex assembly.

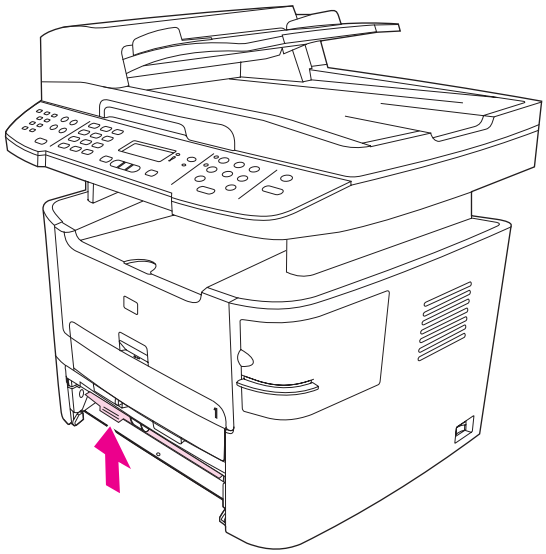

Figure 6-26 Jams in the duplex path (6 of 10)

7. Replace the tray 2 cassette.

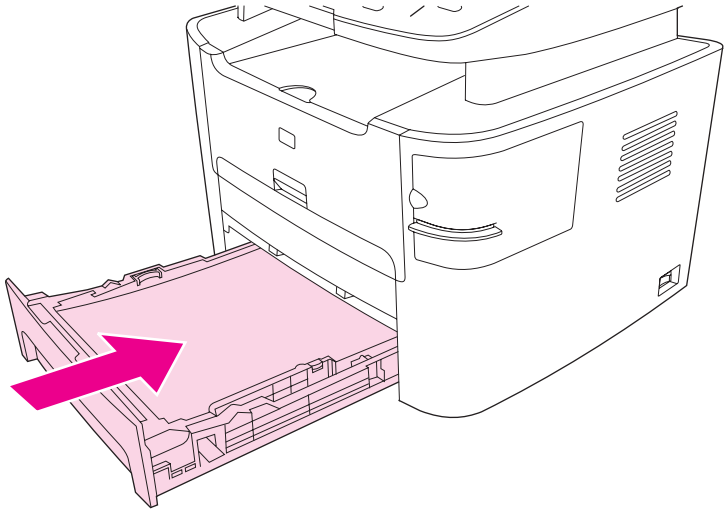

Figure 6-27 Jams in the duplex path (7 of 10)

Download Free Service Manual and Resetter Printer at http://printer1.blogspot.com

8. Close the rear output bin, and then open the duplex-path door on the back of the all-in-one.

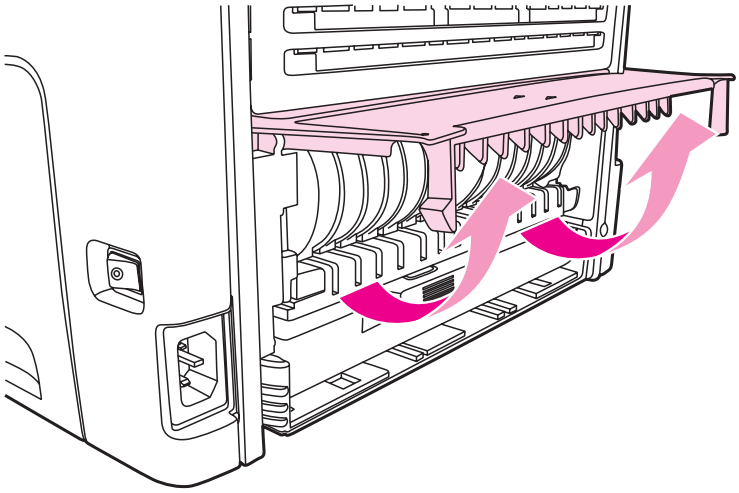

Figure 6-28 Jams in the duplex path (8 of 10)

9. With both hands, grasp the portion of the media that is the most visible (this includes the middle), and carefully pull it free from the all-in-one.

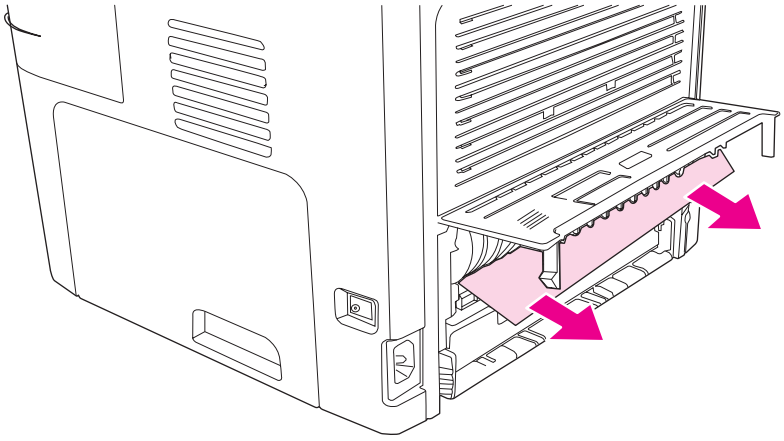

Figure 6-29 Jams in the duplex path (9 of 10)

Download Free Service Manual and Resetter Printer at http://printer1.blogspot.com

10. Close the duplex-path door.

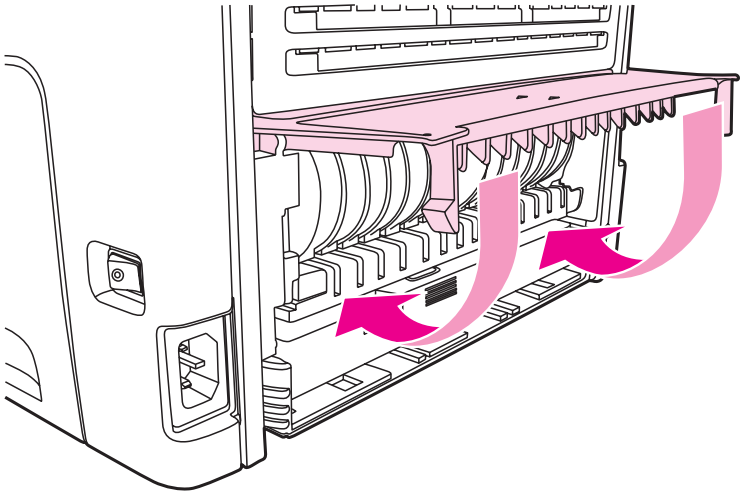

Figure 6-30 Jams in the duplex path (10 of 10)

Jams in the ADF

Jams in the ADF can be caused by the following problems.

- The ADF input tray is loaded incorrectly or is too full.
- The media does not meet HP specifications.

1. Open the ADF cover.

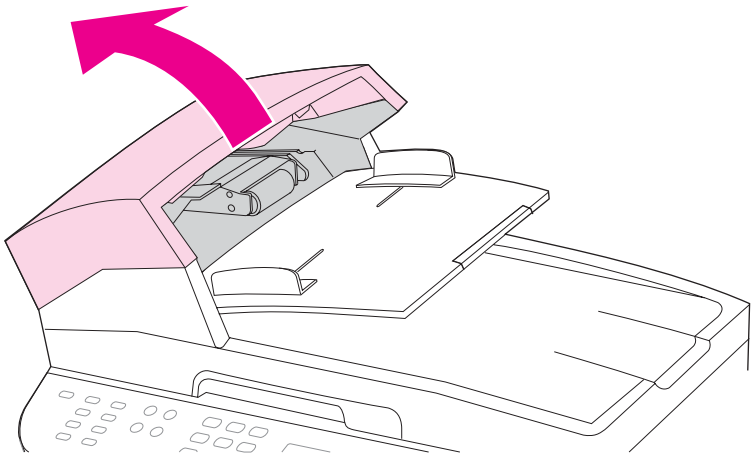

Figure 6-31 Jams in the ADF (1 of 10)

Download Free Service Manual and Resetter Printer at http://printer1.blogspot.com

2. Remove the jam cleanout part (callout 1). Using both hands, lift up until the part unsnaps. Rotate and lift out the cleanout part and set it aside.

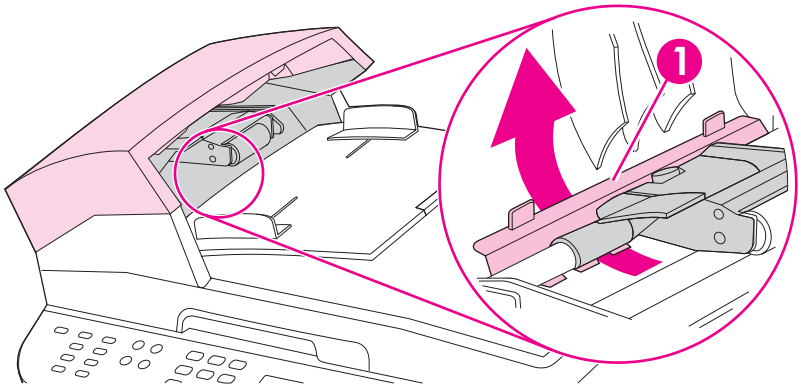

Figure 6-32 Jams in the ADF (2 of 10)

3. Lifting the green lever (callout 2), rotate the pick mechanism until it stays open.

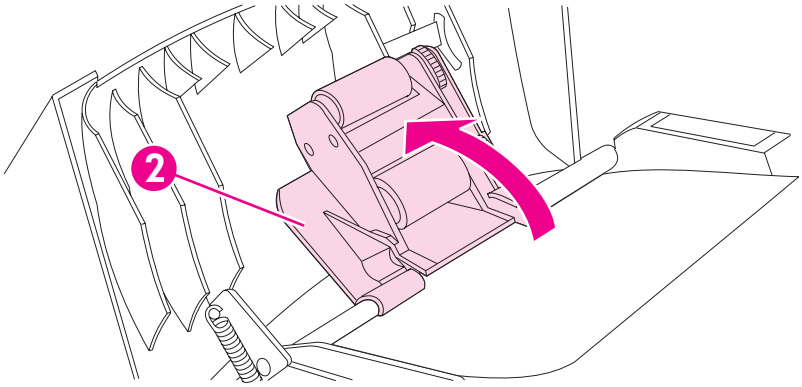

Figure 6-33 Jams in the ADF (3 of 10)

Download Free Service Manual and Resetter Printer at http://printer1.blogspot.com

4. Try to remove the page gently without tearing it. If you feel resistance, go to the next step.

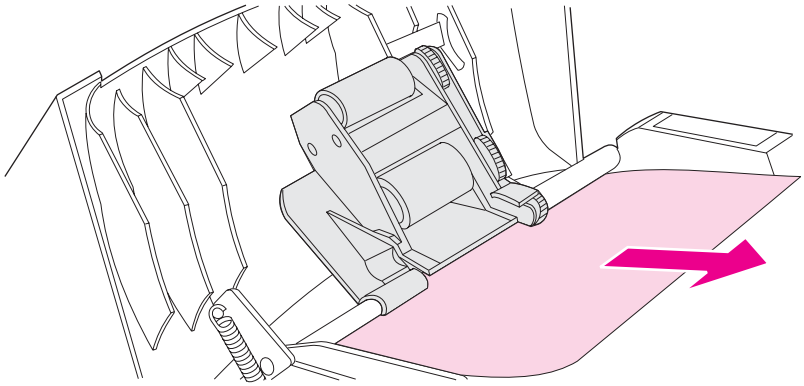

Figure 6-34 Jams in the ADF (4 of 10)

5. Open the scanner cover and gently loosen the media by using both hands.

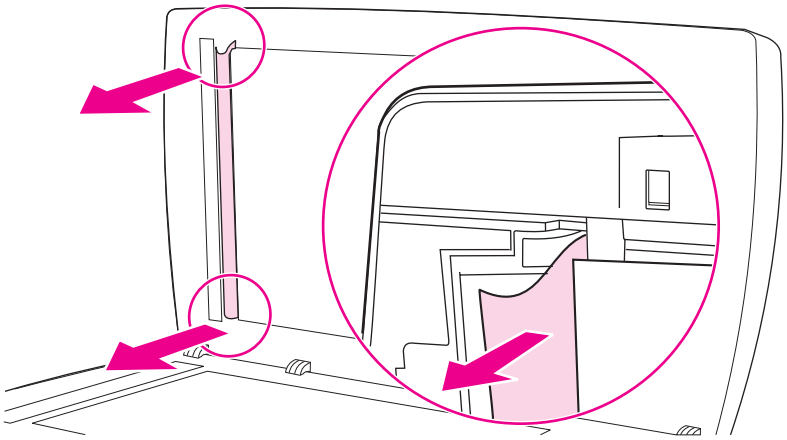

Figure 6-35 Jams in the ADF (5 of 10)

Download Free Service Manual and Resetter Printer at http://printer1.blogspot.com

6. When the media is free, gently pull it out in the direction shown.

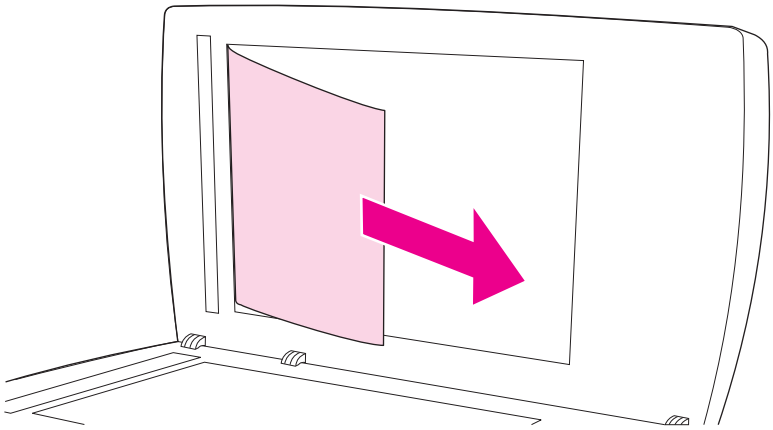

Figure 6-36 Jams in the ADF (6 of 10)

7. Close the scanner cover.

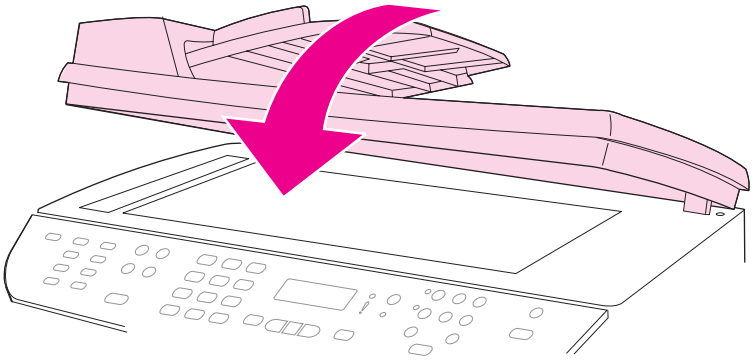

Figure 6-37 Jams in the ADF (7 of 10)

Download Free Service Manual and Resetter Printer at http://printer1.blogspot.com

8. Lower the green lever.

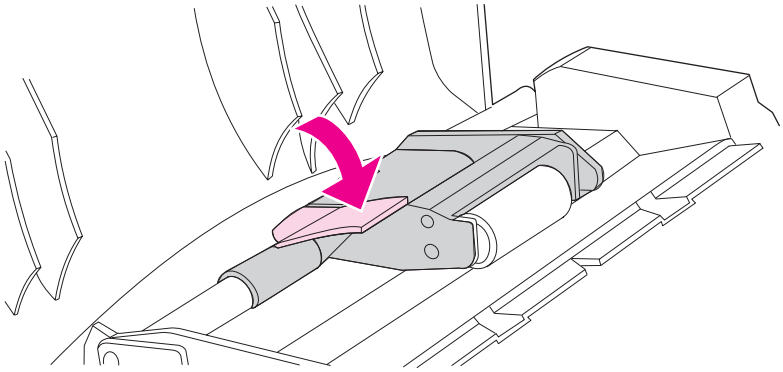

Figure 6-38 Jams in the ADF (8 of 10)

9. Reinstall the cleanout part by inserting it as shown. Push down on the two tabs until the part snap into place. Install the cleanout part correctly, because future jamming might occur if the cleanout part is not replaced correctly.

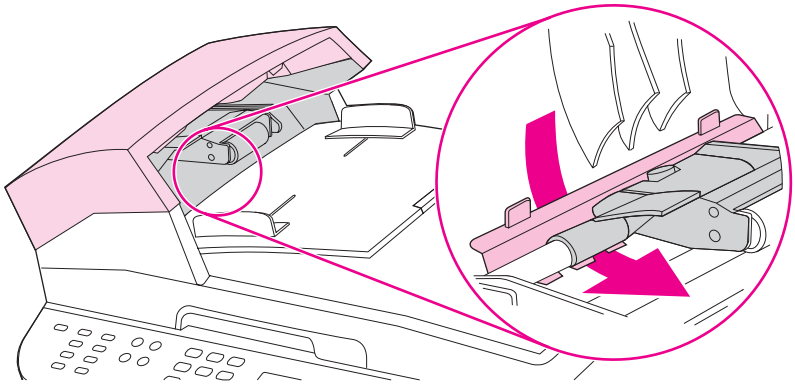

Figure 6-39 Jams in the ADF (9 of 10)

Download Free Service Manual and Resetter Printer at http://printer1.blogspot.com

10. Close the ADF cover.

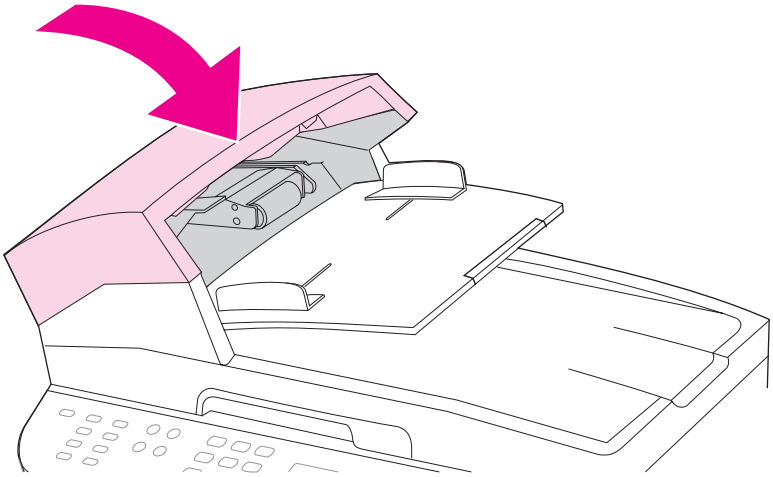

Figure 6-40 Jams in the ADF (10 of 10)

Jams in the convenience stapler (HP LaserJet 3392 only)

To reduce the risk of staple jams, make sure that you staple 20 or fewer pages of media (80 g/m^2 or 20 lb) at a time.

1. Turn off the all-in-one, and open the convenience-stapler door.

NOTE Opening the convenience-stapler door disables the convenience stapler.

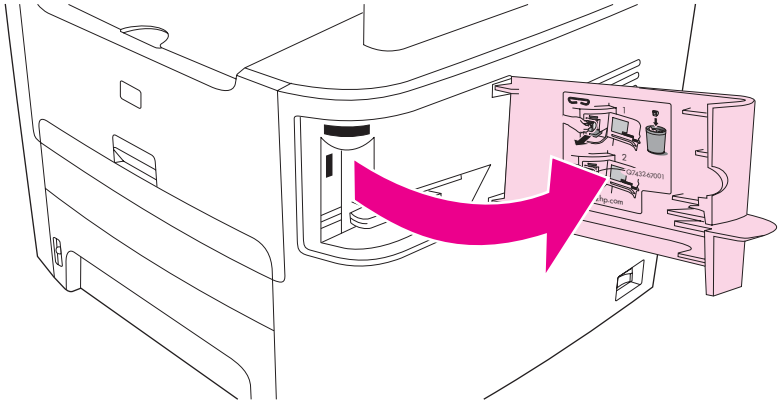

Figure 6-41 Jams in the convenience stapler (1 of 5)

Download Free Service Manual and Resetter Printer at http://printer1.blogspot.com

2. Remove the staple cassette.

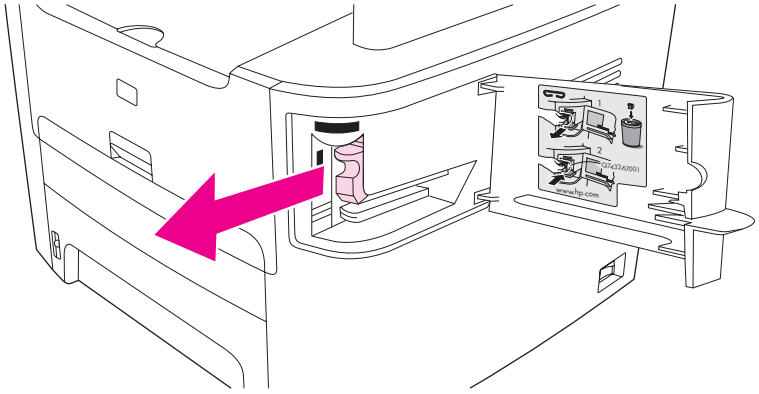

Figure 6-42 Jams in the convenience stapler (2 of 5)

3. Clear any loose staples from the convenience stapler and from the staple cassette.

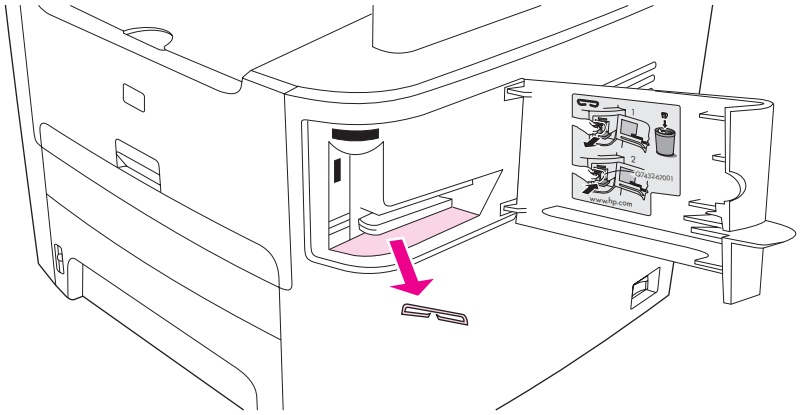

Figure 6-43 Jams in the convenience stapler (3 of 5)

Download Free Service Manual and Resetter Printer at http://printer1.blogspot.com

4. Replace the staple cassette.

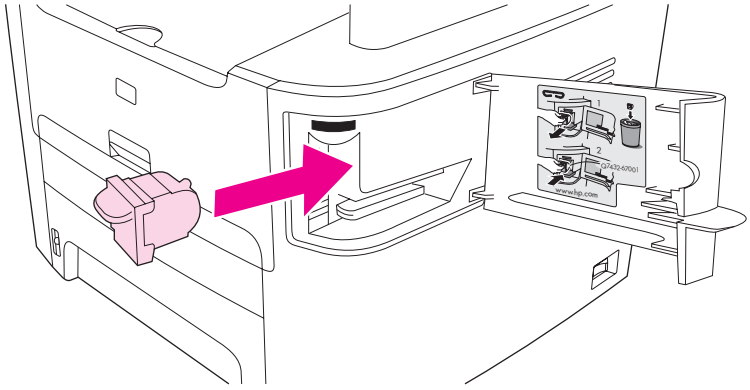

Figure 6-44 Jams in the convenience stapler (4 of 5)

5. Close the convenience stapler-door and turn on the all-in-one. If the jam persists, repeat this procedure.

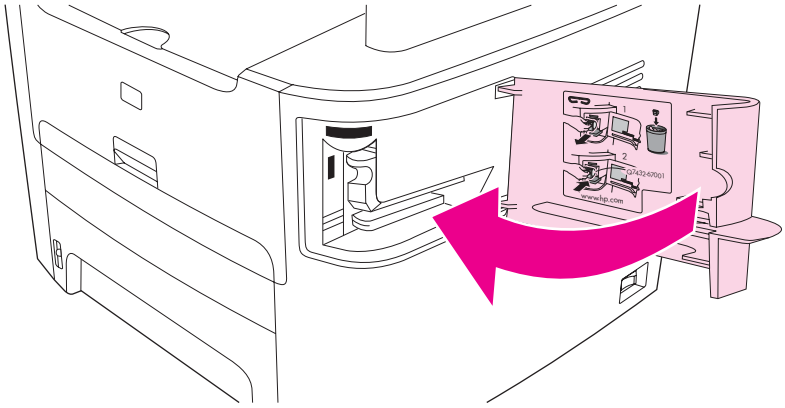

Figure 6-45 Jams in the convenience stapler (5 of 5)

Download Free Service Manual and Resetter Printer at http://printer1.blogspot.com

Control-panel messages

The control-panel messages indicate the status of the current operation, and include a page count on the second line of the display, if appropriate. When the all-in-one is receiving fax data, print data, or scanning commands, the control-panel messages indicate this status. In addition, alert messages, warning messages, and critical-error messages indicate situations that might require some action

Alert and warning messages

Alert and warning messages appear temporarily and might require the user to acknowledge the message by pressing ✔ to resume or by pressing Cancel to cancel the job. With certain warnings, the job might not be completed or the print-quality might be affected. If the alert or warning message is related to printing and the auto-continue feature is on, the all-in-one will attempt to resume the printing job after the warning has appeared for 10 seconds without acknowledgement.

Alert and warning message tables

Table 6-1 Alert and warning messages

Event-log error message	Control panel message	Description	Recommended action
10.XXXX	10.0000; black e-label error 10.1000; black e-label missing 10.3000; non-HP black 10.3100; non-HP cloned black 10.3200; unauthorized black	The print cartridge is not installed correctly.	1. Reinstall the print cartridge. 2. Power-cycle all-in-one. 3. If the problem is not solved, replace the cartridge.
ADF door is open	None	The ADF cover is open or a sensor is malfunctioning.	Make sure that the ADF cover is closed. Remove the ADF and reinstall it. If the message persists, turn off the power by using the power switch, wait at least 30 seconds, and then turn on the power and wait for the all-in-one to initialize. Try another power source.
Canceled copy. Clear document	None	The Cancel button was pressed to cancel the current job while pages were feeding from the ADF. The cancel process does not automatically clear the ADF.	Remove the jammed item. See Jams in the ADF on page 195. Then, clear the items in the ADF tray and start over.
Canceled scan. Clear document	None	The Cancel button was pressed to cancel the current job while pages were feeding from the ADF. The cancel process does not automatically clear the ADF.	Remove the jammed item. See Jams in the ADF on page 195. Then, clear the items in the ADF tray and start over.
Canceled send. Clear document	None	The Cancel button was pressed to cancel the current job while pages were feeding from the ADF tray. The cancel process does not automatically clear the ADF.	Remove the jammed item. See Jams in the ADF on page 195. Then, clear the items in the ADF tray and start over.

Download Free Service Manual and Resetter Printer at http://printer1.blogspot.com

Table 6-1 Alert and warning messages (continued)

Event-log error message	Control panel message	Description	Recommended action
Comm. error	None	A fax communication error occurred between the all-in-one and the sender or receiver.	Allow the all-in-one to retry sending the fax. Unplug the all-in-one telephone cord from the wall, plug in a telephone, and try making a call. Plug the all-in-one phone cord into a jack for another phone line. Try a different phone cord.
Device error. [✔] to cont.	None	The all-in-one experienced an internal communication error.	This is a warning message only. Job output might be affected.
Device is busy. Try again later	None	The all-in-one is currently in use.	Wait for the all-in-one to finish the current job.
Doc feeder jam Clear, Reload	None	A piece of media is jammed in the ADF tray.	Open the ADF cover, clear the jam, close the ADF cover, and reload the paper into the ADF tray.
Document feeder mispick. Reload	None	The media in the ADF tray was not picked up.	Remove the media from the ADF tray, and then reload it.
Engine error press ✔	55.4000	The all-in-one experienced an internal communication error.	This is a warning message only. Job output might be affected.
Fax delayed – send storage full	None	The fax memory is full.	Cancel the fax by pressing ✔ or Cancel. Resend the fax. You might need to send the fax in multiple sections if the error occurs again.
Fax is busy Canceled send	None	The fax line to which you were sending a fax was busy. The all-in-one has canceled sending the fax.	Call the recipient to ensure that the fax machine is on and ready. Check that you are dialing the correct fax number. Check that the **Redial if busy** option is enabled. Check for a dial tone on the phone line by pressing Start Fax. Make sure that the phone is working by disconnecting the all-in-one, plugging in a telephone to the phone line, and making a voice call. Plug the all-in-one phone cord into a jack for another phone line, and then try sending the fax again. Try a different phone cord.
Fax is busy Redial pending	None	The fax line to which you were sending a fax was busy. The all-in-one automatically redials the busy number.	Allow the all-in-one to retry sending the fax. Call the recipient to ensure that the fax machine is on and ready.

Download Free Service Manual and Resetter Printer at http://printer1.blogspot.com

Table 6-1 Alert and warning messages (continued)

Event-log error message	Control panel message	Description	Recommended action
			Check that you are dialing the correct fax number. Check for a dial tone on the phone line by pressing Start Fax. Make sure that the phone is working by disconnecting the all-in-one, plugging in a telephone to the phone line, and making a voice call. Plug the all-in-one phone cord into a jack for another phone line, and try sending the fax again. Try a different phone cord.
Fax memory full Canceling recv.	None	During the fax transmission, the all-in-one ran out of memory. Only the pages that fit into memory will be printed.	Print all of the faxes and have the sender resend the fax. Cancel all fax jobs or clear the faxes from memory. Note: Adding a memory DIMM does not help resolve this issue.
Fax memory full Canceling send	None	During the fax job, the memory filled. All pages of the fax have to be in memory in order for a fax job to work correctly. Only the pages that fit into memory were sent.	Print all of the received faxes or wait until all pending faxes are sent. Ask the sender to send the fax again. Cancel all fax jobs or clear the faxes from memory.
Fax recv. error	None	An error occurred while trying to receive a fax.	Ask the sender to resend the fax. Try faxing back to the sender or another fax machine. Check for a dial tone on the phone line by pressing Start Fax. Check that the telephone cord is securely connected by unplugging and replugging the cord. Make sure that you are using the telephone cord that came with the all-in-one. Make sure that the phone is working by disconnecting the all-in-one, plugging in a telephone to the phone line, and making a voice call. Turn off error-correction mode (ECM), and turn off V.34. Ask the sender to resend the fax.

Download Free Service Manual and Resetter Printer at http://printer1.blogspot.com

Table 6-1 Alert and warning messages (continued)

Event-log error message	Control panel message	Description	Recommended action
			Connect the all-in-one to a different phone line.
Fax Send error	None	An error occurred while trying to send a fax.	Try resending the fax. Try faxing to another fax number. Check for a dial tone on the phone line by pressing Start Fax. Check that the telephone cord is securely connected by unplugging and replugging the cord. Make sure that you are using the telephone cord that came with the all-in-one. Make sure that the phone is working by disconnecting the all-in-one, plugging in a telephone to the phone line, and making a voice call. Connect the all-in-one to a different phone line. Set the fax resolution to **Standard** instead of the default of **Fine**.
Fit to Page on flatbed only	None	The copy reduce/enlarge feature (called **Fit to Page**) applies only to copies made from the flatbed scanner.	Use the flatbed or select another reduction/enlargement setting.
Group dial not allowed in group	None	The speed-dial code that you typed is programmed for a group. Adding a group-dial to another group-dial is not allowed.	Add one-touch buttons (programmed as an individual speed dial) or individual speed-dial codes to a group-dial.
Invalid date	None	An invalid date was specified, such as June 35.	Retype the date.
Invalid driver Press ✔	None	You are using the incorrect printer driver.	Select the printer driver that is appropriate for your all-in-one.
Invalid entry	None	Invalid data or response	Correct the entry.
Mem. low 1 copy Press [cancel]	None	The all-in-one completed making one copy. The remaining copies have been canceled because of low memory.	Press Cancel to clear the error. Break the job into smaller jobs that contain fewer pages.
Memory is low Try again later	None	The all-in-one does not have enough memory to start a new job.	Wait until the current job is finished before starting a new job.
Memory is low. Press [Enter] Press ✔	None	The all-in-one memory has been almost completely filled.	Allow the all-in-one to finish the job, or press ✔ to cancel the job.

Download Free Service Manual and Resetter Printer at http://printer1.blogspot.com

Table 6-1 Alert and warning messages (continued)

Event-log error message	Control panel message	Description	Recommended action
Memory low Only 1 copy made	None	The all-in-one does not have enough memory to complete the collated copy job.	Break the job into smaller jobs that contain fewer pages.
No Dial Tone	None	The all-in-one could not detect a dial tone.	Check for a dial tone on the phone line by pressing Start Fax. Unplug the telephone cord from both the all-in-one and the wall and replug the cord. Make sure that you are using the telephone cord that came with the all-in-one. Unplug the all-in-one telephone cord from the wall, plug in a telephone, and try making a voice call. Plug the all-in-one phone cord into a jack for another phone line.
No document sent	None	The all-in-one did not scan any pages, or it did not receive any pages from the computer to transmit in a fax.	Try sending the fax again.
No fax answer Redial pending	None	The receiving fax line did not answer. The all-in-one attempts to redial after a few minutes.	Allow the all-in-one to retry sending the fax. Call the recipient to ensure that the fax machine is on and ready. Check that you are dialing the correct fax number. If the all-in-one continues to redial, unplug the all-in-one telephone cord from the wall, plug in a telephone, and try making a voice call. Plug the all-in-one phone cord into a jack for another phone line. Try a different phone cord.
No fax answer. Canceled send	None	Attempts to redial a fax number failed, or the **Redial-no answer** option was turned off.	Call the recipient to ensure that the fax machine is on and ready. Check that you are dialing the correct fax number. Check that the redial option is enabled. Unplug the telephone cord from both the all-in-one and the wall and replug the cord. Unplug the all-in-one telephone cord from the wall, plug in a telephone, and try making a voice call.

Download Free Service Manual and Resetter Printer at http://printer1.blogspot.com

Table 6-1 Alert and warning messages (continued)

Event-log error message	Control panel message	Description	Recommended action
			Plug the all-in-one phone cord into a jack for another phone line.
No fax detected	None	The all-in-one answered the incoming call but did not detect that a fax machine was calling.	Allow the all-in-one to retry receiving the fax. Try a different phone cord. Plug the all-in-one phone cord into a jack for another phone line.
No paper pickup [Enter] to cont. ✔ to cont.	None	The all-in-one has failed to pick up a piece of media.	Verify that the media was inserted far enough into the input tray. In tray 2, verify that the paper-length guide is in the correct position for the media size that you are using. Reload the media in the input tray and press ✔ to continue the job.
Page too complex [Enter] to cont. ✔ to cont.	none	The all-in-one could not print the current page because of its complexity.	Press ✔ to clear the message. Allow the all-in-one to finish the job, or press Cancel to cancel the job.
Paper jam in (area)	13.0000	The all-in-one has detected a jam in one of the following areas: tray 1, tray 2, optional tray 3, the registration area, or the fuser.	Clear the jam from the area indicated on the all-in-one control panel, and then follow the control panel instructions. See Jams on page 177.
Scanner reserved for PC scan	None	A computer is using the all-in-one to create a scan.	Wait until the computer scan has finished, or cancel the scan from the computer software, or press Cancel.
Scanning error Cannot connect	52.0000	The all-in-one cannot transmit scan information to a computer.	Verify that the connection cable is not loose or damaged. Replace the cable if necessary, and try the scan again.
Settings cleared	None	The all-in-one has cleared job settings.	Specify any appropriate job settings.
Unauthorized supply in use/ Unauthorized black to accept press ✔.	None	A new supply has been installed that is not made by HP. This message is shown until an HP supply is installed or ✔ is pressed.	If you believe you purchased an HP supply, please call the HP fraud hotline at 1-877-219-3183. Service or repairs that are required as a result of using non-HP supplies is not covered under HP warranty. To continue printing, press ✔. The first pending job will be cancelled.

Download Free Service Manual and Resetter Printer at http://printer1.blogspot.com

Critical-error message-tables

Table 6-2 Critical-error messages

Control panel message	Description	Recommended action
49 Error	The all-in-one has experienced an internal embedded software error.	Turn off the power by using the power switch, wait at least 30 seconds, and then turn on the power and wait for the all-in-one to initialize.
50.x Fuser Error	The all-in-one has experienced an internal hardware error.	1. Turn off the power by using the power switch, and then wait at least 30 seconds. 2. If a surge protector is being used, remove it. Plug the all-in-one directly into the electrical outlet. 3. Turn on the power and wait for the all-in-one to initialize.
51 Laser Error	The all-in-one has experienced an internal hardware error.	Turn off the power by using the power switch, wait at least 30 seconds, and then turn on the power and wait for the all-in-one to initialize. If a surge protector is being used, remove it. Plug the all-in-one directly into the electrical outlet. Use the power switch to turn the all-in-one on.
52 Scanner Error	The all-in-one has experienced an internal hardware error.	Turn off the power by using the power switch, wait at least 30 seconds, and then turn on the power and wait for the all-in-one to initialize. If a surge protector is being used, remove it. Plug the all-in-one directly into the electrical outlet. Use the power switch to turn the all-in-one on.
54.2, 55.1, 59.16, 59.192, 59.4, 59.99 Errors	The all-in-one has experienced an internal hardware error.	Turn off the power by using the power switch, wait at least 30 seconds, and then turn on the power and wait for the all-in-one to initialize. If a surge protector is being used, remove it. Plug the all-in-one directly into the electrical outlet. Use the power switch to turn the all-in-one on.
57 Fan Error	The all-in-one has experienced a problem with its internal fan.	Turn off the power by using the power switch, wait at least 30 seconds, and then turn on the power and wait for the all-in-one to initialize.
79 Error Turn off then on	The all-in-one has experienced an internal firmware error.	Turn off the power by using the power switch, wait at least 30 seconds, and then turn on the power and wait for the all-in-one to initialize. If you have already installed a memory DIMM in the all-in-one, turn off the all-in-one, remove the memory DIMM, reinstall the DIMM to verify that it is seated properly, and then turn on the all-in-one. If a surge protector is being used, remove it. Plug the all-in-one directly into the electrical

Download Free Service Manual and Resetter Printer at http://printer1.blogspot.com

Table 6-2 Critical-error messages (continued)

Control panel message	Description	Recommended action
		outlet. Use the power switch to turn on the all-in-one.

Download Free Service Manual and Resetter Printer at http://printer1.blogspot.com

Print problems

Print-quality problems

The information in the following sections helps you identify and resolve print-quality issues.

NOTE If you are having copy problems, see Copy problems on page 226.

Improving print quality

Use the print-quality settings to prevent print-quality problems.

Understanding print-quality settings

Print-quality settings affect how light or dark the print is on the page and the style in which the graphics are printed. You can also use the print-quality settings to optimize the print quality for a specific media type.

You can change the settings in the all-in-one properties to accommodate the types of jobs that you are printing. The following settings are available, depending on the printer driver that you are using:

- **600 dpi**
- **Custom:** This setting produces the same resolution as the default setting, but you can change the scale patterns.

NOTE Changing the resolution can change the formatting of your text.

To temporarily change print-quality settings

To change the print-quality settings only for the current software program, open the properties through the **Print Setup** menu in the program that you are using to print.

To change print-quality settings for all future jobs

NOTE For Macintosh instructions, see the user guide.

For Windows 98, Windows 2000, and Windows Me:

1. In the Windows system tray, click **Start**, select **Settings**, and then click **Printers**.
2. Right-click the all-in-one icon.
3. Click **Properties** (in Windows 2000, you can also click **Printing Preferences**).
4. Change the settings, and click **OK**.

For Windows XP:

1. In the Windows system tray, click **Start**, click **Control Panel**, and then click **Printers and Faxes**.
2. Right-click the all-in-one icon.

Download Free Service Manual and Resetter Printer at http://printer1.blogspot.com

3. Click **Properties**, or click **Printing Preferences**.

4. Change the settings, and click **OK**.

Identifying and correcting print defects

Use the checklist and print-quality issues charts in this section to solve print-quality problems.

Print-quality checklist

General print-quality problems can be solved by using the following checklist:

1. Make sure that the paper or print media that you are using meets specifications. Generally, smoother paper provides better results.

2. If you are using a special print media such as labels, transparencies, glossy paper, or letterhead, ensure that you have printed by type.

3. Print a Configuration page and Supplies Status page at the all-in-one control panel.

   - Check the Supplies Status page to see if any supplies are low or empty. No information is provided for non-HP print cartridges.

4. Print a Demo page from the HP ToolboxFX. If the page prints, the problem is with the printer driver. Try printing from another printer driver. For example, if you are using the PCL 6 printer driver, print from the PS printer driver.

   - Use the Add Printer Wizard in the **Printers** (or **Printers and Faxes** in Windows XP) dialog box to install the PS driver.

5. Try printing from a different program. If the page prints correctly, the problem is with the program from which you were printing.

6. Restart the computer and the all-in-one and try printing again. If the problem is not resolved, see General print-quality issues on page 212.

General print-quality issues

The following examples depict letter-size paper that has passed through the all-in-one short-edge-first. These examples illustrate problems that would affect all of the pages that you print. The topics that follow list the typical cause and solution for each of these examples.

Problem	Cause	Solution
Print is light or faded. 	The media might not meet HP specifications.	Use media that meets HP specifications. Make sure that the media meets specifications in the *HP LaserJet Printer Family Print Media Guide*.
	The print cartridge might be low. If you use a non-HP print cartridge, no messages appear on the all-in-one control panel or in the HP ToolboxFX.	Replace the print cartridge. See Remove the print cartridge on page 113. If the print cartridge is not low or empty, inspect the transfer roller to see if it is damaged. If it is not , replace the print cartridge.

Download Free Service Manual and Resetter Printer at http://printer1.blogspot.com

Problem	Cause	Solution
	If the whole page is light, the print density adjustment is too light or EconoMode might be turned on.	Adjust the print density, and disable EconoMode in the all-in-one Properties.
Toner specks appear.	The media might not meet HP specifications.	Use media that meets HP specifications. Make sure that the media meets specifications in the *HP LaserJet Printer Family Print Media Guide*.
	The paper path might need to be cleaned.	Clean the paper path. See Cleaning the print path on page 65, or see the HP ToolboxFX online Help.
Dropouts appear.	A single sheet of print media might be defective.	Try reprinting the job.
	The moisture content of the paper is uneven or the paper has moist spots on its surface.	Try different paper, such as high-quality paper that is intended for laser printers.
	The paper lot is flawed. The manufacturing processes can cause some areas to reject toner.	Try different paper, such as high-quality paper that is intended for laser printers.
	The print cartridge might be defective.	Replace the print cartridge. See Remove the print cartridge on page 113.
Vertical streaks or bands appear on the page.	The print cartridge might be low or defective. If you are using a non-HP print cartridge, no messages appear on the all-in-one control panel or in the HP ToolboxFX.	Replace the print cartridge. See Remove the print cartridge on page 113.
The amount of background toner shading becomes unacceptable.	The media might not meet HP specifications.	Use a different paper with a lighter basis weight.
	The single-sheet priority input slot (tray 1) might be installed incorrectly.	Make sure that the single-sheet priority input slot (tray 1) is in place.
	The print-density setting is too high.	Decrease the print-density setting through HP ToolboxFX or the embedded Web server. This decreases the amount of background shading.
	Very dry (low humidity) conditions can increase the amount of background shading.	Check the all-in-one environment.

Download Free Service Manual and Resetter Printer at http://printer1.blogspot.com

Problem	Cause	Solution
	The print cartridge might be low. If you are using a non-HP print cartridge, no messages appear on the all-in-one control panel or in the HP ToolboxFX.	Replace the print cartridge. See Remove the print cartridge on page 113.
Toner smears appear on the media.	The media might not meet HP specifications.	Use media that meets HP specifications. Make sure that the media meets specifications in the *HP LaserJet Printer Family Print Media Guide*.
	If toner smears appear on the leading edge of the paper, the media guides are dirty, or debris has accumulated in the print path.	Clean the media guides and the paper path. See Cleaning the all-in-one on page 56.
	The print cartridge might be low. If you are using a non-HP print cartridge, no messages appear on the all-in-one control panel or in the HP ToolboxFX.	Replace the print cartridge. See Remove the print cartridge on page 113.
	The fuser temperature might be too low.	In the printer driver, make sure the appropriate media type is selected.
The toner smears easily when touched.	The all-in-one is not set to print on the type of media on which you want to print.	In the printer driver, select the **Paper** tab and set **Type is** to match the type of media on which you are printing. Print speed might be slower if you are using heavy paper.
	The media might not meet HP specifications.	Use media that meets HP specifications. Make sure that the media meets specifications in the *HP LaserJet Printer Family Print Media Guide*.
	The paper path might need to be cleaned.	Clean the all-in-one. See Cleaning the all-in-one on page 56.
	The power source might be defective.	Plug the all-in-one directly into an ac outlet instead of into a power strip.
	The print cartridge might be low. If you are using a non-HP print cartridge, no messages appear on the all-in-one control panel or in the HP ToolboxFX.	Replace the print cartridge. See Remove the print cartridge on page 113.
Marks repeatedly appear at even intervals on the page.	The all-in-one is not set to print on the type of media on which you want to print.	In the printer driver, make sure that the appropriate media type is selected. Print speed might be slower if you are using heavy paper.
	Internal parts might have toner on them.	The problem typically corrects itself after a few more pages.
	The paper path might need to be cleaned.	Clean the all-in-one. See Cleaning the all-in-one on page 56.
	The print cartridge might be damaged.	If a repetitive mark occurs at the same spot on the page, install a new HP print cartridge. See Remove the print cartridge on page 113.
The printed page contains misformed characters.	The media might not meet HP specifications.	Use a different paper, such as high-quality paper that is intended for laser printers.

Download Free Service Manual and Resetter Printer at http://printer1.blogspot.com

Problem	Cause	Solution
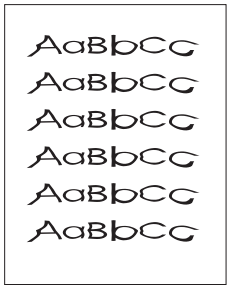	If characters are incorrectly formed so that they produce a wavy effect, the laser scanner might need replacing.	Verify that the problem also occurs on the Configuration page. If so, replace the laser/scanner. See Laser/scanner on page 144.
The printed page is curled or wavy. 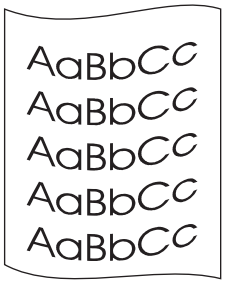	The all-in-one is not set to print on the type of media on which you want to print.	In the printer driver, make sure the appropriate media type is selected. If the problem persists, select a media type that uses a lower fuser temperature, such as transparencies or light media.
	The media might have been in the input tray too long.	Turn over the stack of media in the tray. Also, try rotating the media 180° in the input tray.
	The paper path is curling the media.	Open the rear output door to print to the straight-through output path.
	The media might not meet HP specifications.	Use a different paper, such as high-quality paper that is intended for laser printers.
	Both high temperature and humidity can cause paper curl.	Check the all-in-one environment.
Text or graphics are skewed on the printed page. 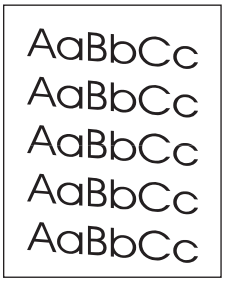	The media might be loaded incorrectly or the input tray might be too full.	Verify that the media is loaded correctly and that the media guides are not too tight or too loose against the stack. See Loading media on page 26.
	The media might not meet HP specifications.	Use a different paper, such as high-quality paper that is intended for laser printers.
The printed page contains wrinkles or creases. 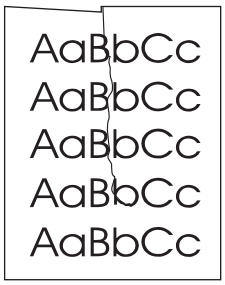	The media might be loaded incorrectly or the input tray might be too full.	Turn over the stack of paper in the input tray, or try rotating the paper 180° in the input tray. Verify that the media is loaded correctly and that the media guides are not too tight or too loose against the stack. See Loading media on page 26.
	The media might not meet HP specifications.	Use a different paper, such as high-quality paper that is intended for laser printers.
	The paper path is curling the media.	Open the rear output door to print to the straight-through output path.

Download Free Service Manual and Resetter Printer at http://printer1.blogspot.com

Problem	Cause	Solution
	Air pockets inside envelopes can cause them to wrinkle.	Remove the envelope, flatten it, and try printing again.
Toner appears around the printed characters.	The media might be loaded incorrectly.	Turn over the stack of paper in the tray.
	If large amounts of toner have scattered around the characters, the paper might have high resistivity.	Use a different paper, such as high-quality paper that is intended for laser printers.
An image that appears at the top of the page (in solid black) repeats farther down the page (in a gray field).	Software settings might affect image printing.	In your software program, change the tone (darkness) of the field in which the repeated image appears. In your software program, rotate the whole page 180° to print the lighter image first.
	The order of images printed might affect printing.	Change the order in which the images are printed. For example, have the lighter image at the top of the page, and the darker image farther down the page.
	A power surge might have affected the all-in-one.	If the defect occurs later in a print job, turn the all-in-one off for 10 minutes, and then turn on the all-in-one to restart the print job.
Droplets of water are deposited on the trailing edge of the page.	Moisture in the all-in-one is condensing on the fuser assembly. In excessively hot and humid areas, media retains moisture. **NOTE** Water droplets do not damage the all-in-one.	Try moving the all-in-one to a less humid area. Try a different media.

Download Free Service Manual and Resetter Printer at http://printer1.blogspot.com

Media-handling problems

Use the information in this section when the all-in-one experiences media-handling problems.

Print-media guidelines

- For best results, make sure that the paper is of good quality, and free of cuts, nicks, tears, spots, loose particles, dust, wrinkles, voids, staples, and curled or bent edges.
- For best-quality printing, use a smooth type of paper. Generally, smoother media produces better results.
- If you are unsure what type of paper you are loading (such as bond or recycled), check the label on the package of paper.
- Do not use media that is designed for Inject printers only. Use media that is designed for LaserJet printers.
- Do not use letterhead paper that is printed with low-temperature inks, such as those used in some types of thermography.
- Do not use raised or embossed letterhead.
- The all-in-one uses heat and pressure to fuse toner to the paper. Make sure that any colored paper or preprinted forms use inks that are compatible with this fusing temperature (200°C or 392°F for 0.1 second).

CAUTION Failure to follow these guidelines could cause jams or damage to the all-in-one.

Solving print-media problems

The following problems with media cause print-quality deviations, jamming, or even damage to the all-in-one.

Problem	Cause	Solution
Poor print quality or toner adhesion	The paper is too moist, too rough, too heavy or too smooth, or it is embossed or from a faulty paper lot.	Try another kind of paper, between 100 and 250 Sheffield, with 4 to 6% moisture content.
Dropouts, jamming, or curl	The paper has been stored incorrectly.	Store paper flat in its moisture-proof wrapping.
	The paper has variability from one side to the other.	Turn the paper over.
Excessive curl	The paper is too moist, has the wrong grain direction, or is of short-grain construction	Open the rear output bin, or use long-grain paper.
	The paper varies from side-to-side.	Turn the paper over.
Jamming, damage to all-in-one	The paper has cutouts or perforations.	Use paper that is free of cutouts or perforations.
Problems with feeding	The paper has ragged edges.	Use high-quality paper that is made for laser printers.
	The paper varies from side-to-side.	Turn the paper over.

Download Free Service Manual and Resetter Printer at http://printer1.blogspot.com

Problem	Cause	Solution
	The paper is too moist, too rough, too heavy or too smooth, has the wrong grain direction, or is of short-grain construction or it is embossed or from a faulty paper lot.	Try another kind of paper, between 100 and 250 Sheffield, 4% to 6% moisture content.
		Open the rear output bin, or use long-grain paper.
Skewed (crooked) print	The media guides might be incorrectly adjusted.	Remove all media from the input tray, straighten the stack, and then load the media in the input tray again. Adjust the media guides to the width and length of the media that you are using and try printing again.
More than one sheet feeds at one time.	The media tray might be overloaded.	Remove some of the media from the tray.
	The media might be wrinkled, folded, or damaged.	Verify that the media is not wrinkled, folded, or damaged. Try printing on media from a new or different package.
The all-in-one does not pull media from the media input tray.	The all-in-one might be in manual feed mode.	• If **Manual feed** appears on the all-in-one control-panel display, press ✔ to print the job. • Verify that the all-in-one is not in manual feed mode and print your job again.
	The pickup roller might be dirty or damaged.	Replace the tray 2 pickup roller. See Replacing the tray 2 pickup roller on page 42.
	The paper-length adjustment control in tray 2 or optional tray 3 is set at a length that is greater than the media size.	Adjust the paper-length adjustment control to the correct length.

Performance problems

Try the tips in this section if pages exit the all-in-one, but have nothing printed on them, or when the all-in-one does not print any pages.

Problem	Cause	Solution
Pages exit after the print cycle but are totally blank	The sealing tape might still be in the print cartridge.	Verify that the sealing tape has been completely removed from the print cartridge.
	The document might contain blank pages.	Check the document that you are printing to see if content appears on all of the pages.
	The all-in-one might be malfunctioning.	To check the all-in-one, print a Configuration page.
	Certain media types can slow the print job.	Print on a different type of media.

Download Free Service Manual and Resetter Printer at http://printer1.blogspot.com

Problem	Cause	Solution
Pages did not print	The all-in-one might not be pulling media correctly.	See Media-handling problems on page 217.
	The media is jamming in the all-in-one.	Clear the jam. See Jams on page 177.
	The USB cable might be defective or incorrectly connected.	• Disconnect the USB cable at both ends and reconnect it. • Try printing a job that has printed in the past. • Try using a different USB cable.
	Other devices are running on your computer.	The all-in-one might not share a USB port. If you have an external hard drive or network switch box that is connected to the same port as the all-in-one, the other device might be interfering. To connect and use the all-in-one, you must disconnect the other device or you must use two USB ports on the computer.

Download Free Service Manual and Resetter Printer at http://printer1.blogspot.com

Fax problems

Problems receiving faxes

Use the table in this section to solve problems that might occur when receiving faxes.

NOTE You must use the fax cord that came with the all-in-one in order to ensure that the all-in-one functions correctly.

Problem	Cause	Solution
The all-in-one cannot receive faxes from an extension telephone.	The extension-telephone setting might be disabled.	Verify that the extension-telephone setting is enabled.
	The fax cord might not be securely connected.	Verify that the fax cord is securely connected between the telephone jack and the all-in-one (or another device that is connected to the all-in-one). Press 1-2-3 in sequence (tone-dial mode only), wait for three seconds, and then hang up.
	The all-in-one dialing mode might be incorrectly set, or the extension phone might be incorrectly set.	Verify that the all-in-one dialing mode is set to **Tone**. Verify that the extension phone is set up for tone dialing as well.
The all-in-one is not answering incoming fax calls.	The answer mode might be set to **Manual**.	If the answer mode is set to **Manual**, the all-in-one does not answer calls. You have to start the fax-receiving process manually.
	The rings-to-answer setting might not be set correctly.	Check the rings-to-answer setting for your configuration.
	The answer-ring pattern feature might be turned on, but you do not have the service, or you do have the service and the feature is not set correctly.	Check the answer-ring pattern feature to verify that it is set properly.
	The fax cord might not be correctly connected, or the fax cord is not working.	See the Getting Started Guide to check the installation. Verify that you are using the fax cord that came with the all-in-one.
	The all-in-one might not be able to detect incoming fax tones because the answering machine is playing a voice message.	Re-record your answering machine message, leaving at least two seconds of silence at the beginning of the message.
	Too many devices might be connected to the telephone line.	You should not have more than three devices attached to the line. Try removing the last device that was connected and determine whether the all-in-one works. If not, continue removing devices one at a time and retry after removing each one.

Download Free Service Manual and Resetter Printer at http://printer1.blogspot.com

Problem	Cause	Solution
	The telephone line might not be working.	Do one of the following: • Increase the volume on the all-in-one, and then press Start Fax on the control panel. If you hear a dial tone, the telephone line is working. • Disconnect the all-in-one from the telephone jack, and then connect a telephone. Try to make a telephone call to verify that the telephone line is working.
The all-in-one is not answering incoming fax calls.	A voice-messaging service might be interfering with the all-in-one as it attempts to answer calls.	Do one of the following: • Disable the messaging service. • Get a telephone line that is dedicated to fax calls. • Set the all-in-one answer mode to **Manual**. In manual mode, you must start the fax-receive process yourself. • Leave the all-in-one set to automatic mode and lower the rings-to-answer setting for the all-in-one to a number less than the rings-to-answer setting for the voice mail. The all-in-one will answer all incoming calls.
	The all-in-one might be out of paper and the memory is full.	Refill the media input tray. Press ✔. The all-in-one prints all of the faxes it has saved in memory and then resumes answering fax calls.
Faxes are not printing.	The media input tray is empty.	Load media. Any faxes that are received while the input tray is empty are stored in memory and will print after the tray has been refilled.
	The receive-to-PC option might be selected, and faxes are being received by the computer.	Check to determine whether the computer is receiving faxes.
Faxes are printing on two pages instead of one.	The auto reduction setting might not be set correctly.	Turn on the auto reduction setting.
	The incoming faxes might have been sent on larger media.	Adjust the auto reduction setting to allow larger pages to be printed on one page.
Received faxes are too light or are printing only on half of the page.	The all-in-one ran out of toner while printing a fax.	The all-in-one stores the most recently printed faxes. (The amount of memory that is available determines the actual number of faxes stored for reprinting.) As soon as possible, replace the print cartridge, and then reprint the fax.
	The fax that was sent was too light.	Contact the sender and have the sender resend the fax after altering the settings.

Download Free Service Manual and Resetter Printer at http://printer1.blogspot.com

Problems sending faxes

Problem	Cause	Solution
The document stops feeding in the middle of faxing.	The maximum length of a page that you can load is 381 mm (15 inches). Faxing of a longer page stops at 381 mm (15 inches).	Print the document on shorter media. If no jam exists and less than one minute has elapsed, wait a moment before pressing Cancel. If a jam exists, see Jams on page 177. Then, resend the job.
	If the item is too small, it can jam inside the automatic document feeder (ADF).	Use the flatbed scanner. The minimum page size for the ADF is 127 x 127 mm (5 x 5 inches). If a jam exists, see Jams on page 177. Then, resend the job.
Faxes stop during sending.	The fax machine to which you are sending might be malfunctioning.	Try sending to another fax machine.
	Your telephone line might not be working.	Do one of the following: • Turn up the volume on the all-in-one, and then press Start Fax on the control panel. If you hear a dial tone, the telephone line is working. • Disconnect the all-in-one from the jack in the wall, and then connect a telephone to the jack. Try to make a telephone call to verify that the telephone line is working.
	A communication error might be interrupting the fax job.	Change the redial-on-communication-error setting to **On**.
The all-in-one is receiving faxes but is not sending them.	If your all-in-one is on a PBX system, the PBX system might be generating a dial tone that the all-in-one cannot detect.	Disable the detect-dial-tone setting.
	A poor telephone connection might exist.	Try again later.
	The fax machine to which you are sending might be malfunctioning.	Try sending to another fax machine.
	Your telephone line might not be working.	Do one of the following: • Turn up the volume on the all-in-one and press Start Fax on the control panel. If you hear a dial tone, the telephone line is working. • Disconnect the all-in-one from the telephone jack and connect a telephone. Try to make a telephone call to verify that the telephone line is working.
Outgoing fax calls continue to be dialed.	The all-in-one automatically redials a fax number if the redial options are set to **On**.	To stop the redials while the all-in-one is dialing, press Cancel.
Faxes that you send are not arriving at the receiving fax machine.	The receiving fax machine might be off or might have an error condition, such as being out of paper.	Call the recipient to verify that the fax machine is on and ready to receive faxes.

Download Free Service Manual and Resetter Printer at http://printer1.blogspot.com

Problem	Cause	Solution
	The originals might be incorrectly loaded.	Verify that the original documents are correctly loaded into the ADF input tray or flatbed scanner. See Loading media on page 26.
	A fax might be in memory because it is waiting to redial a busy number, other jobs that are ahead of it are waiting to be sent, or the fax is set up for a delayed send.	If a fax job is in memory for any of these reasons, an entry for the job appears in the fax log. Print the fax activity log and check the **Status** column for jobs that show a **Pending** designation.
Faxes you send include a block of gray shading at the end of each page.	You might be sending a fax from the flatbed scanner with the glass-fax size set incorrectly.	Verify that the setting is correct.
Faxes you send have data missing from the end of each page.	You might be sending a fax from the flatbed scanner with the glass-fax size set incorrectly.	Verify that the setting is correct.
You receive a Low Memory error.	You might be sending a fax that is too large, or the resolution might be too high.	Try one of the following: • Divide a large fax into smaller sections, and then fax them individually. • Clear stored faxes to make more memory available for outgoing faxes. • Configure the outgoing fax as a delayed fax, and then verify that it will send completely. • Make sure that you are using the lowest resolution setting (**Standard**).

Voice-call problems

Problem	Cause	Solution
The telephone or answering machine that is connected to the line is not receiving voice calls.	The fax cord might not be correctly connected.	See the Getting Started Guide to check the installation. The all-in-one must be the first device connected to the telephone line.
	The answer mode or rings-to-answer settings might not be correctly set.	The rings-to-answer must be set higher than the answering machine setting.
	The answering machine or telephone might not be functioning.	Connect the telephone or answering machine directly to the telephone line and determine if it works by itself.
	The problem persists.	See the Fax chapter in the all-in-one user guide.

Download Free Service Manual and Resetter Printer at http://printer1.blogspot.com

Media-handling problems

NOTE For information about removing jams, see Jams on page 177.

Problem	Cause	Solution
Print is skewed (crooked).	The media input tray might be overloaded.	Remove some of the media from the input tray.
	The media guides might be incorrectly set, broken, or missing.	Verify that the guides are not adjusted too tightly or too loosely against the paper. Check for broken or missing guides, and replace them if necessary.
	The media might not meet HP specifications.	Use media that meets HP specifications.
Pages are curled or wrinkled.	The media might not meet HP specifications.	Use media that meets HP specifications.
	The paper path might be affecting the pages.	Open the rear output door on the back of the all-in-one and use this paper path.
	The media is not stored properly.	When possible, store media in its sealed ream at room temperature.
	The media has been in the input tray too long.	Turn over the stack of media in the tray or rotate the media 180° in the paper tray.

Download Free Service Manual and Resetter Printer at http://printer1.blogspot.com

Performance problems

Problem	Cause	Solution
Faxes are transmitting or being received very slowly.	The fax might be very complex, such as one with many graphics.	Complex faxes take longer to be sent or received. Breaking longer faxes into multiple jobs and decreasing the resolution can increase the transmission speed.
	The receiving fax machine might have a slow modem speed.	The all-in-one only sends the fax at the fastest modem speed that the receiving fax machine can accept.
	The resolution at which the fax was sent or is being received might be very high.	If you are receiving the fax, call and ask the sender to lower the resolution and resend the fax. If you are sending the fax, lower the resolution and resend the fax.
	Your telephone line might not be working.	Hang up and resend the fax. Have the telephone company check the telephone line.
	You are sending a fax via an international call.	You must allow more time to transmit fax jobs internationally.
The fax activity logs or fax call reports are printing at inappropriate times.	The fax activity log or fax call reports settings are not correct.	Print a Configuration page and check when the reports print.
The all-in-one sounds are too loud or too soft.	The volume setting might not be adjusted correctly.	Adjust the volume setting.

Download Free Service Manual and Resetter Printer at http://printer1.blogspot.com

Copy problems

Preventing problems

The following are a few simple steps you can take to improve copy quality:

- Copy from the flatbed scanner. This will produce a higher quality copy than copying from the automatic document feeder (ADF).
- Use quality originals.
- Load the media correctly. If the media is loaded incorrectly, it might skew, causing unclear images and problems with the OCR program.
- Use or make a carrier sheet to protect your originals.

NOTE Verify that the media meets HP specifications. If the media meets HP specifications, recurring feed problems indicate the pickup roller or separation pad is worn.

Image problems

Problem	Cause	Solution
Images are missing or faded.	The print-cartridge toner-level might be low.	Replace the print cartridge. See Remove the print cartridge on page 113.
	The original might be of poor quality.	If your original is too light or damaged, the copy might not be able to compensate, even if you adjust the contrast. If possible, find an original document in better condition.
	The original might have a colored background.	Colored backgrounds might cause images in the foreground to blend into the background, or the background might appear in a different shade. If possible, use an original document without a colored background.
Vertical white or faded stripes appear on the copy.	The media might not meet HP specifications.	Use media that meets HP specifications.
AaBbCc AaBbCc AaBbCc AaBbCc AaBbCc	The print-cartridge toner-level might be low.	Replace the print cartridge. See Remove the print cartridge on page 113.
Unwanted lines appear on the copy.	Tray 2 might not be installed correctly.	Verify that the tray is in place.
	The flatbed scanner or the ADF glass might be dirty.	Clean the flatbed scanner or the ADF glass. See Cleaning the all-in-one on page 56.

Download Free Service Manual and Resetter Printer at http://printer1.blogspot.com

Problem	Cause	Solution
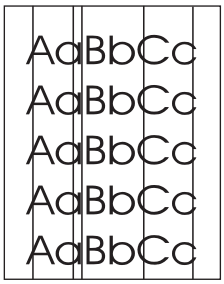	The photosensitive drum inside the print cartridge might have been scratched.	Install a new HP print cartridge. See Remove the print cartridge on page 113.
Black dots or streaks appear on the copy.	Ink, glue, correction fluid, or an unwanted substance might be on the automatic document feeder (ADF) or flatbed scanner.	Clean the all-in-one. See Cleaning the all-in-one on page 56.
Copies are too light or dark.	The printer driver or all-in-one software settings might be incorrect.	Verify that the quality settings are correct. See the all-in-one software Help for more information about changing the settings.
Text is unclear.	The printer driver or all-in-one software settings might be incorrect.	Verify that the quality settings are correct. See the all-in-one software Help for more information about changing the settings.

Media-handling problems

Problem	Cause	Solution
Poor print quality or toner adhesion	The paper is too moist, too rough, too heavy or too smooth, or it is embossed or from a faulty paper lot.	Try another kind of paper, between 100 and 250 Sheffield, 4% to 6% moisture content.
Dropouts, jamming, or curl	The paper has been stored incorrectly.	Store paper flat in its moisture-proof wrapping.
	The paper has variability from one side to the other.	Turn the paper over.
Excessive curl	The paper is too moist, has the wrong grain direction, or is of short-grain construction	Open the rear output bin, or use long-grain paper.
	The paper varies from one side to the other.	Turn the stack over.
Jamming, damage to all-in-one	The paper has cutouts or perforations.	Use paper that is free of cutouts or perforations.
Problems with feeding	The paper has ragged edges.	Use high-quality paper that is made for laser printers.
	The paper varies from side-to-side.	Turn the paper over.
	The paper is too moist, too rough, too heavy or too smooth, has the wrong grain direction, or is of short-grain construction	Try another kind of paper, between 100 and 250 Sheffield, 4% to 6% moisture content.

Download Free Service Manual and Resetter Printer at http://printer1.blogspot.com

Problem	Cause	Solution
	or it is embossed or from a faulty paper lot.	Open the rear output bin, or use long-grain paper.
Print is skewed (crooked).	The media guides might be incorrectly adjusted.	Remove all media from the input tray, straighten the stack, and then load the media in the input tray again. Adjust the media guides to the width and length of the media that you are using and try printing again.
More than one sheet feeds at one time.	The media tray might be overloaded.	Remove some of the media from the tray.
	The media might be wrinkled, folded, or damaged.	Verify that the media is not wrinkled, folded, or damaged. Try printing on media from a new or different package.
The all-in-one does not pull media from the media input tray.	The all-in-one might be in manual feed mode.	• If **Manual feed** appears on the all-in-one control-panel display, press ✔ to print the job. • Verify that the all-in-one is not in manual feed mode and print your job again.
	The pickup roller might be dirty or damaged.	Replace the pickup roller. See Replacing the tray 2 pickup roller on page 42.
	The paper-length adjustment control in tray 2 or optional tray 3 is set at a length that is greater than the media size.	Adjust the paper-length adjustment control to the correct length.

Download Free Service Manual and Resetter Printer at http://printer1.blogspot.com

Performance problems

Problem	Cause	Solution
No copy came out.	The input tray might be empty.	Load media in the all-in-one. See Loading media on page 26 for more information.
	The original might have been loaded incorrectly.	In the automatic document feeder (ADF), load the original with the narrow side forward and the side to be scanned facing up. On the flatbed scanner, place the original document face-down with the upper-left corner of the document at the lower-right corner of the glass.
Copies are blank.	The sealing tape might not have been removed from the print cartridge.	Remove the print cartridge from the all-in-one, pull out the sealing tape, and reinstall the print cartridge.
	The original might have been loaded incorrectly.	In the ADF, load the original with the narrow side forward and the side to be scanned facing up. On the flatbed scanner, make sure that the original document is placed face-down with the upper-left corner of the document at the lower-right corner of the glass.
	The media might not meet HP specifications.	Use media that meets HP specifications.
	The print-cartridge toner-level might be low.	Replace the print cartridge. See Remove the print cartridge on page 113.
The wrong original was copied.	The ADF might be loaded.	Make sure that the ADF is empty.
Copies are reduced in size.	The all-in-one software settings might be set to reduce the scanned image.	See the HP ToolboxFX Help for more information about changing the settings.

Download Free Service Manual and Resetter Printer at http://printer1.blogspot.com

Scan problems

Solving scanned-image problems

Problem	Cause	Solution
The scanned image is of poor quality.	The original might be a second-generation photo or picture.	• To eliminate the patterns, try reducing the size of the image after scanning. • Print the scanned image to see if the quality is better. • Verify that your resolution and color settings are correct for the type of scan job that you are performing. • For best results, use the flatbed scanner for scanning rather than the automatic document feeder (ADF).
	The image that appears on the screen might not be an accurate representation of the quality of the scan.	• Try adjusting your computer monitor settings to use more colors (or levels of gray). Typically, you make this adjustment by opening **Display** in Windows Control Panel. • Try adjusting the resolution and color settings in the scanner software.
	The original might have been loaded incorrectly.	Use the media guides when you load the originals into the ADF. See Loading documents onto the flatbed scanner or into the ADF on page 26.
	The scanner might be dirty.	Clean the scanner. See Cleaning the all-in-one on page 56.
	The graphics settings might not be suitable for the type of scan job that you are performing.	Try changing the graphics settings.
Part of the image did not scan.	The original might have been loaded incorrectly.	Use the media guides when you load the originals into the ADF. See Loading documents onto the flatbed scanner or into the ADF on page 26.
	A colored background might be causing images in the foreground to blend into the background.	Try adjusting the settings before you scan the original or enhancing the image after you scan the original.
	The original is longer than 381 mm (15 inches).	The maximum scannable length is 381 mm (15 inches) when you use the automatic document feeder (ADF) input tray. If the page exceeds the maximum length, the scanner stops. (Copies can be longer.)

Download Free Service Manual and Resetter Printer at http://printer1.blogspot.com

Problem	Cause	Solution
		CAUTION Do not try to pull the original from the ADF; you might damage the scanner or your original. See Jams in the ADF on page 195.
	The original is too small.	The minimum size that the flatbed scanner supports is 25 x 25 mm (1 x 1 inch). The minimum size that the ADF supports is 127 x 127 mm (5 x 5 inches). The original might be jammed. See Jams on page 177.
	The media size is incorrect.	In **Scan** settings, make sure that the input media size is large enough for the document that you are scanning.
The scan takes too long	The resolution or color level is set too high.	Change the resolution and color level settings to the correct settings for your job.
	The software is set to scan in color.	The system default is color, which takes longer to scan even when scanning a monochrome original. If you acquire an image through TWAIN or WIA, you can change the settings so that the original scans in grayscale or black-and-white. See the all-in-one software Help for details.
	A print job or copy job was sent before you tried to scan.	If someone sent a print job or copy job before you tried to scan, the scan will start if the scanner is not busy. However, because the all-in-one and scanner share memory, the scan might be slower.

Download Free Service Manual and Resetter Printer at http://printer1.blogspot.com

Scan-quality problems

Preventing problems

The following are a few simple steps you can take to improve copy and scan quality.

- Use the flatbed scanner, rather than the automatic document feeder (ADF) input tray, to scan.
- Use high-quality originals.
- Load the media correctly. If the media is loaded incorrectly, it might skew, which causes unclear images. See Loading media on page 26 for instructions.
- Adjust the software settings according to how you plan to use the scanned page.
- If your all-in-one frequently feeds more than one page at a time, you might need to replace the separation pad. See Replacing the tray 2 and optional tray 3 separation pad on page 47.
- Use or make a carrier sheet to protect your originals.

Solving scan-quality problems

Problem	Description	Solution
Blank pages	The original might have been loaded upside down.	In the automatic document feeder (ADF), put the top end of the stack of originals into the ADF input tray, with the media stack face-up and the first page to be scanned on top of the stack. On the flatbed scanner, place the original document face-down with the upper-left corner of the document at the lower-right corner of the glass.
Too light or dark	The resolution and color levels might be set incorrectly.	Verify that you have the correct resolution and color settings.
Unwanted lines	Ink, glue, correction fluid, or an unwanted substance might be on the glass.	Clean the flatbed scanner surface. See Cleaning the flatbed scanner glass on page 56.
	The ADF glass might be dirty.	Clean the ADF glass. See Cleaning the scanner-cover backing on page 57.
Black dots or streaks	Ink, glue, correction fluid, or an unwanted substance might be on the glass.	Clean the flatbed scanner surface. See Cleaning the flatbed scanner glass on page 56.
Unclear text	The resolution and color levels may be set incorrectly.	Verify that you have the correct resolution and color settings.

Download Free Service Manual and Resetter Printer at http://printer1.blogspot.com

Scan-specific error messages

Table 6-3 Scan-specific error messages

Message	Cause	Solution
BulbWarmupFromOff	The scanner might not be reaching the threshold light level.	1. Turn the all-in-one off and then on. 2. Replace the scanning assembly. See Scanner assembly on page 126. 3. Replace the formatter. See Formatter on page 139.
DarkFind	The bulb will not illuminate, and the scanner moves to the right. The CCD might not be able to find a suitable dark spot in the scanning assembly in order to warm up.	
LMWTempFind	The scanner sets temporary LMW window.	

Download Free Service Manual and Resetter Printer at http://printer1.blogspot.com

Control-panel display problems

CAUTION Static electricity can cause unexpected black lines or dots to appear on the all-in-one control-panel display. Do not touch the all-in-one control-panel display if there is a chance that you have collected a static electric charge (for example, by walking on carpet in a low-humidity environment).

Unexpected lines or dots might appear on the all-in-one control-panel display, or the display might become blank if the all-in-one is exposed to an electric or magnetic field. To resolve this problem, perform the following procedure:

1. Turn the all-in-one off.
2. Remove the all-in-one from the electric or magnetic field.
3. Turn the all-in-one on again.

Convenience-stapler problems (HP LaserJet 3392 only)

The convenience stapler is designed to be free of staple jams. To reduce the risk of staple jams, make sure that you staple 20 or fewer pages of media (80 g/m^2 or 20 lb) at a time.

The convenience stapler does not staple pages.

Cause	Solution
The convenience-stapler door is not completely closed.	Make sure that the convenience-stapler door is completely closed.
The convenience stapler has a staple jam.	Clear the staple jam. See Jams in the convenience stapler (HP LaserJet 3392 only) on page 200.

Download Free Service Manual and Resetter Printer at http://printer1.blogspot.com

DSL problems

A digital subscriber line (DSL) uses digital technology over standard copper phone wires. These DSL services rely on an AM signal. The HP LaserJet 3390/3392 all-in-one is a Group 3 fax device, which operates below the DSL capability and is not directly compatible with digital signals. However, if the configuration is specified during the DSL line setup, the signal on a DSL line can be separated so that some of the bandwidth is used to transmit an analog signal (for voice and fax) while the remaining bandwidth transmits digital data. Split the signal to use both the telephone or fax and the computer on the same line and at the same time.

NOTE Not all printers and faxes are compatible with DSL services. HP does not guarantee that the HP LaserJet all-in-one will be compatible with all DSL service lines or providers.

The DSL modem requires a high-pass filter. When DSL service is installed, the service provider sometimes supplies a splitter, which includes a low-pass filter, for the normal phone wiring. If not, the user should contact the DSL provider to request a filter or splitter so that a fax modem can operate on the line.

NOTE HP recommends discussing the DSL-line setup options with the DSL service provider. Consult the DSL provider for technical installation requirements.

An Asymmetric Digital Subscriber Line (ADSL) is a version of DSL that provides greater efficiency by allowing upload and download rates to differ. Because ADSL is a version of DSL, the previous DSL information also applies to ADSL.

PABX line problems

The HP LaserJet all-in-one is an analog device that is not compatible with all digital phone environments (unless a digital-to-analog converter is used). it might be difficult for you to troubleshoot fax issues without assistance from someone who is familiar with the technical details of the customer's digital environment and the analog converter. HP does not guarantee that the HP LaserJet all-in-one will be compatible with digital environments or digital-to-analog converters.

Download Free Service Manual and Resetter Printer at http://printer1.blogspot.com

ADF problems

The "Document loaded" message continually appears on the control-panel display.

Cause	Solution
The ADF paper-sensor flag is damaged.	Replace the ADF. See ADF assembly on page 124.

The "Scanner error" message continually appears on the control-panel display.

Cause	Solution
The ADF-to-scanner connector is not connected correctly or the ADF is not functioning.	Reseat the connector. If the problem persists, replace the ADF. See ADF assembly on page 124.

The ADF pickup roller does not move.

Cause	Solution
The ADF-to-scanner connector is not connected correctly or the ADF is not functioning.	Reseat the connector. If the problem persists, replace the ADF. See ADF assembly on page 124.

The ADF makes grinding, squeaking, or rubbing noises when a sheet feeds from the ADF input tray.

Cause	Solution
The wrong ADF pickup-roller assembly is installed.	Make sure that the correct roller assembly is installed. if the problem persists, replace the ADF pickup-roller assembly. See Replacing the ADF pickup-roller assembly on page 50.

The sheet begins to feed from the ADF input tray but does not completely move through the ADF. The sheet *can* be pushed through the ADF by hand.

Cause	Solution
The cleanout comb is not installed or is incorrectly installed.	Make sure that the cleanout comb is installed correctly.
The ADF pickup rollers are dirty.	Clean the rollers. See Cleaning the ADF pickup-roller assembly on page 62.
The media is curled or was stored in a high-humidity environment.	Use media that meets HP recommendations. See the user guide for media specifications.
The ADF pickup-roller assembly is damaged or is not functioning.	Replace the ADF pickup-roller assembly. See Replacing the ADF pickup-roller assembly on page 50.

Download Free Service Manual and Resetter Printer at http://printer1.blogspot.com

The sheet begins to feed from the ADF input tray but does not move through the ADF completely. The sheet *cannot* be pushed through the ADF by hand.

Cause	Solution
The ADF pickup-roller assembly is damaged or is not functioning.	Replace the ADF pickup-roller assembly. See Replacing the ADF pickup-roller assembly on page 50.

Download Free Service Manual and Resetter Printer at http://printer1.blogspot.com

Functional checks

Drum rotation test

The photosensitive drum, located in the print cartridge, must rotate in order for the print process to work. The photosensitive drum receives its drive from the main drive assembly.

NOTE This test is especially important if refilled print cartridges have been used.

1. Open the print-cartridge door.
2. Remove the print cartridge.
3. Mark the drive gear on the cartridge with a felt-tipped marker. Note the position of the mark.
4. Install the print cartridge and close the print-cartridge door. The startup sequence should rotate the drum enough to move the mark.
5. Open the print-cartridge door and inspect the gear that was marked in step 3. Verify that the mark moved.

If the mark did not move, inspect the main drive assembly to make sure that it is meshing with the print cartridge gears. If the drive gears appear functional and the drum does not move, replace the print cartridge.

Engine test

The engine test is used to verify that the print engine is functioning correctly. The formatter is bypassed during the engine test.

To perform an engine test

1. Remove the left cover. See Left cover on page 116.

Download Free Service Manual and Resetter Printer at http://printer1.blogspot.com

2. Use a *non-conductive* probe to depress the engine-test switch. A single test page prints.

CAUTION Use a non-conductive probe to depress the engine test switch. Inserting a conductive probe to depress the switch can damage the all-in-one.

NOTE The formatter must be connected to the ECU in order to perform an engine test. Otherwise, the all-in-one does not print.

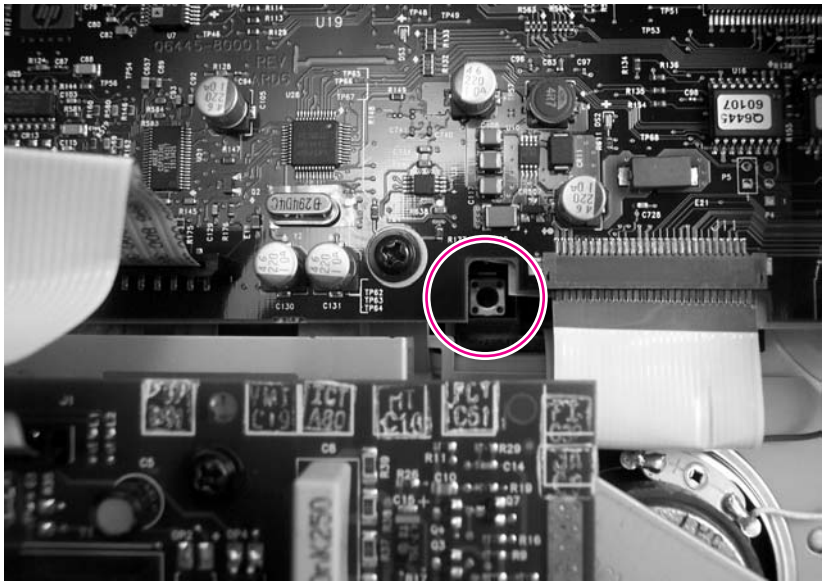

Figure 6-46 Engine test switch

Half self-test functional check

The print process can be subdivided into the following stages:

- Image formation stage (charges the drum and writes a latent image to the drum with the laser)
- Development stage (forms a toner image on the drum)
- Transfer stage (transfers the image to the media)
- Cleaning stage (removes excess toner from the drum)
- Fusing stage (applies heat and pressure to the media to make the image permanent)

To perform a half self-test check

The purpose of the half self-test check is to determine which process is malfunctioning.

1. Print a configuration page.
2. Open the print cartridge access door after the paper advances halfway through the all-in-one (approximately five seconds after the motor begins rotating). The leading edge of the paper should have advanced past the print cartridge.
3. Remove the print cartridge.
4. Open the print cartridge drum shield to view the drum surface. If a dark and distinct toner image is present on the drum surface, assume that the first two functions of the electrophotographic process

Download Free Service Manual and Resetter Printer at http://printer1.blogspot.com

are functioning (image formation and development). Troubleshoot the failure as a transfer or fusing problem.

To perform other checks

If no image appears on the photosensitive drum, perform these checks:

1. Make sure that you removed the entire length of the sealing tape from the print cartridge before you installed the cartridge.
2. Perform a drum-rotation functional check to ensure that the drum is rotating (see Drum rotation test on page 238).
3. Perform a high-voltage power-supply check. See Heating element check on page 240.

Heating element check

Media passes between the heating element and a soft pressure roller to fuse toner to the media.

1. Unplug the all-in-one for at least ten minutes.
2. Verify that the thermistor connector is seated into both the all-in-one chassis and the ECU.
3. Remove the heating element connector from the ECU. To measure the continuity of the heating element, measure the resistance between the two pins at the end of the cable.

   NOTE Normal resistance is 25 ohms +/- 10 ohms for the 110 V all-in-one and 80 ohms +/- 20 ohms for the 220 V all-in-one.

   If no resistance is measured, replace the fuser.
4. Remove the thermistor connector, and then measure the resistance between J206 pins one and two and between J206 pins three and four.

   NOTE Normal resistance between both pairs of pins is 370K ohms +/- 50K ohms at 20° C (68°F).
5. If no resistance is measured, replace the fuser.

High-voltage contacts check

The high-voltage contacts in the all-in-one must have a good connection with the contacts on the print cartridge to provide the necessary voltages for the electrophotographic processes.

To check the print-cartridge contacts

Remove the print cartridge and visually inspect the three connection points on the ends of the print cartridge: drum ground (callout 1), charging (callout 2), and developing roller (callout 3). If they are dirty or corroded, clean the connection. If they are damaged, replace the print cartridge.

NOTE Use only isopropyl alcohol to clean the connections.

Download Free Service Manual and Resetter Printer at http://printer1.blogspot.com

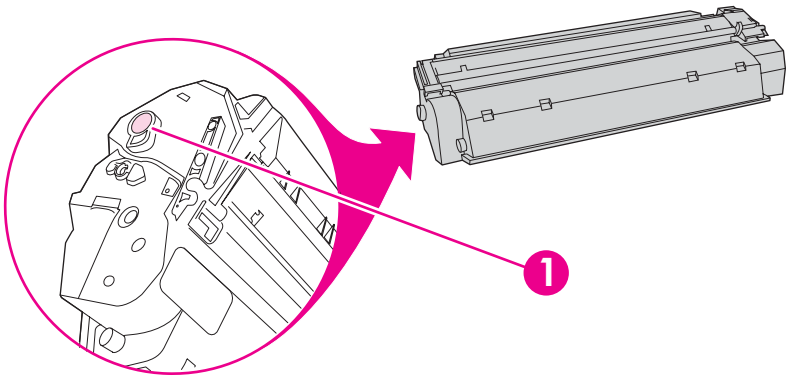

Figure 6-47 Print-cartridge high-voltage connection points (right side)

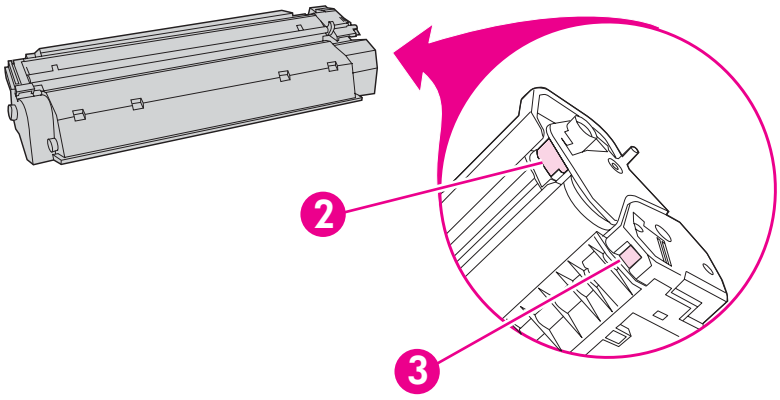

Figure 6-48 Print-cartridge high-voltage connection points (left side)

To check the high-voltage connector assembly

Visually inspect the cartridge connection points inside the all-in-one to make sure that they are not dirty or corroded. If the pins are dirty, clean them by using isopropyl alcohol only.

Download Free Service Manual and Resetter Printer at http://printer1.blogspot.com

Service-mode functions

NVRAM initialization

An NVRAM initialization will return the following device settings to the factory-set defaults:

- All menu settings, including the fax header and company name
- Fax numbers and names that are associated with one-touch keys and speed-dial codes

Additionally, all faxes stored in memory are cleared.

To perform a NVRAM initialization

1. Turn off the device.
2. Simultaneously press and hold the Enter button and the * button, and then turn on the device.
3. Wait until the message **Permanent storage init.** appears, and then release the Enter and * buttons.

When the NVRAM initialization process has been completed, the device control panel shows the **Ready** message.

Secondary service menu

NOTE An asterisk (*) symbol next to a secondary service submenu option indicates that this is the current setting for that option.

For more information about the secondary service menu, see Service menu on page 247.

To access the secondary service menu

1. Press the Menu button.
2. Use the < or < button to scroll to **Main Menu Service**, and then press the ✔ button.
3. Use the < or < button to scroll to the desired secondary-service option, and then press the ✔ button.
4. Use the < or < button to scroll to the desired submenu option, and then press the ✔ button.

Service menu item	Submenu option	Description
Print T.30 trace	**At end of call*** **Never** **Now** **If error**	Use a T.30 trace report to troubleshoot fax transmission and receive errors.
Archive print	**Off*** **On**	The archive print feature produces output that is less susceptible to toner smearing and dusting. Use archive print to create documents that you want to preserve or archive.

Download Free Service Manual and Resetter Printer at http://printer1.blogspot.com

Service menu item	Submenu option	Description
IESS PAPER CURL	**Off*** **On**	Lowers the fuser temperature.
PowerSave time	**2 Hours** **4 Hours** **8 Hours*** **12 Hours**	Use this item to set the amount of time before the all-in-one enters PowerSave mode.
Cleaning mode	None	Press ✔ to start the cleaning process. See Cleaning the print path on page 65 for more information.
Restore defaults	None	**CAUTION** This procedure clears fax numbers and names that are associated with one-touch keys and speed-dial codes, and deletes any pages that are stored in the memory. The procedure then automatically restarts the all-in-one. Press ✔ to restore the all-in-one factory settings.

Download Free Service Manual and Resetter Printer at http://printer1.blogspot.com

Troubleshooting tools

The section describes the tools that can help you solve problems with your all-in-one.

All-in-one pages and reports

This section describes the pages and reports that help you diagnose and solve problems with the all-in-one.

Demo page

To print the Demo page, complete the following steps.

1. On the all-in-one control panel, press Menu until the **Reports** menu appears, and then press ✔ .
2. Use the < or the > button until **Demo Page** appears, and then press ✔ .

Configuration page

The Configuration page lists the current settings and properties of the all-in-one. You can print a Configuration page from the all-in-one or HP ToolboxFX. To print the Configuration page from the all-in-one, complete the following steps.

1. On the all-in-one control panel, press Menu.
2. Use the < or the > button to select **Reports**, and then press ✔ .
3. Use the < or the > button to select **Config report**, and then press ✔ .

Supplies Status page

The Supplies Status page lists the remaining life of the HP print cartridge. It also lists the estimated pages remaining, number of pages printed, and other supplies information. You can print a Supplies Status page from the all-in-one or HP ToolboxFX. To print from the all-in-one, complete the following steps.

1. On the control panel menu, press Menu.
2. Use the < or the > button to select **Reports**, and then press ✔ .
3. Use the < or the > button to select **Supplies Status**, and then press ✔ .

Download Free Service Manual and Resetter Printer at http://printer1.blogspot.com

Fax reports

This section describes the fax reports that help you diagnose and solve problems with the all-in-one.

Fax activity log

The fax activity log provides a chronological history of the last 40 faxes that were received, sent, or deleted, and any errors that occurred.

To print the fax activity log

1. On the all-in-one control panel, press Menu.
2. Use the < or the > button to select **Reports**, and then press ✔.
3. Use the < or the > button to select **Fax Activity log**, and then press ✔.
4. Press ✔ to select **Print log now**. The all-in-one exits the menu settings and prints the log.

Fax call report

A fax call report is a brief report that indicates the status of the last fax that was sent or received.

To print a fax call report

1. On the all-in-one control panel, press Menu.
2. Use the < or the > button to select **Reports**, and then press ✔.
3. Use the < or the > button to select **Fax Call report**, and then press ✔.
4. Press ✔ to select **Print report now**. The all-in-one exits the menu settings and prints the report.

Phone book report

A phone book report lists the fax numbers that are assigned to the one-touch buttons and speed-dial and group-dial entries.

To print a phone book report

1. On the all-in-one control panel, press Menu.
2. Use the < or the > button to select **Reports**, and then press ✔.
3. Use the < or the > button to select **PhoneBook report**, and then press ✔. The all-in-one exits the menu settings and prints the report.

Download Free Service Manual and Resetter Printer at http://printer1.blogspot.com

Billing-code report

The billing-code report is a printed list of all of the fax billing codes and the total number of faxes that have been billed to each code.

NOTE After this report is printed, all billing data is deleted.

To print a billing-code report

1. On the all-in-one control panel, press Menu.
2. Use the < or the > button to select **Reports**, and then press ✔.
3. Use the < or the > button to select **Billing report**, and then press ✔. The all-in-one exits the menu settings and prints the report.

HP ToolboxFX

HP ToolboxFX is a Web-based program that you can use for troubleshooting tasks.

To view HP ToolboxFX

Open HP ToolboxFX in one of these ways:

- On the Windows desktop, double-click the HP ToolboxFX icon.
- On the Windows **Start** menu, click **Programs** (**All Programs** in Windows XP), and then click HP ToolboxFX.

Troubleshooting tab

HP ToolboxFX includes a **Troubleshooting** tab that contains links to the following main pages:

- **Control Panel Messages**. View descriptions of all-in-one control-panel messages.
- **Clearing Jams**. View information about locating and clearing jams.
- **Print Problems**. View Help topics that can help you solve print problems.
- **Scan Problems**. View Help topics that can help you solve scan problems.
- **Copy Problems**. View Help topics that can help you solve copy problems.
- **Fax Problems**. View Help topics that can help you solve fax problems.
- **Connectivity Problems**. View Help topics that can help you solve networking problems.
- **Troubleshooting Tools**. Employ such troubleshooting tools as a cleaning page to maintain the all-in-one.
- **Animated Demonstrations**. View animated Help demonstrations for the all-in-one.

NOTE Other tabs on FX might be helpful in troubleshooting all-in-one problems.

Download Free Service Manual and Resetter Printer at http://printer1.blogspot.com

Service menu

Use the control-panel **Service** menu to troubleshoot all-in-one problems.

Restoring the factory-set defaults

Restoring the factory-set defaults returns all of the settings to the factory defaults, and it also clears the fax header name and phone number.

CAUTION This procedure clears fax numbers and names that are associated with one-touch keys and speed-dial codes, and deletes any pages that are stored in the memory. The procedure then automatically restarts the all-in-one.

To restore the factory-set defaults

1. On the all-in-one control panel, press Menu.
2. Use the < or the > button to select **Service**, and then press ✔.
3. Use the < or the > button to select **Restore defaults**, and then press ✔.

   The all-in-one automatically restarts.

Cleaning the paper path

The all-in-one features a special cleaning mode to clean the paper path.

NOTE If you have access to HP ToolboxFX, HP recommends cleaning the paper path by using HP ToolboxFX.

To clean the paper path

1. On the all-in-one control panel, press Menu.
2. Use the < or the > button to select **Service**, and then press ✔.
3. Use the < or the > button to select **Cleaning Mode**, and then press ✔.

   A page feeds through the all-in-one slowly. Discard the page when the process is completed.
4. Load plain letter or A4 paper when you are prompted.
5. Press ✔ again to confirm and begin the cleaning process.

   A page feeds through the all-in-one slowly. Discard the page when the process is completed.

Download Free Service Manual and Resetter Printer at http://printer1.blogspot.com

T.30 protocol trace

Use a T.30 protocol trace report to troubleshoot fax transmission issues.

To print a T.30 protocol trace report

Send a fax from the all-in-one or receive a fax to the all-in-one from another fax machine, and then print a T.30 trace report after the fax prints.

1. On the all-in-one control panel, press Menu.
2. Use the < or the > button to select **Service**, and then press ✔.
3. Use the < or the > button to select **Print T.30**, and then press ✔.

   The all-in-one exits the menu settings and prints the reports.

Archive print

Archive print produces output that is less susceptible to toner smearing and dusting. Use archive print to create documents that you want to preserve or archive.

To turn on archive print

1. On the all-in-one control panel, press Menu.
2. Use the < or the > button to select **Service**, and then press ✔.
3. Use the < or the > button to select **Archive print**, select **On** or **Off**, and then press ✔.

Download Free Service Manual and Resetter Printer at http://printer1.blogspot.com

Firmware updates and recovery

The all-in-one has a flash-memory-based formatter that enables the firmware code to be updated in the event that new firmware is released for the all-in-one. Using flash memory also provides a way to recover the firmware in the event of code corruption or failure.

Firmware update by using a flash executable file

The configuration page lists the firmware version of the all-in-one. On the flash-memory-based all-in-one, you can update the firmware code by downloading the latest flash executable file for the all-in-one and running the program according to the readme instructions that come with it (go to www.hp.com). Turn the all-in-one off and then on before running the executable file. If the firmware becomes corrupted or fails (usually because of an interruption when attempting to update the firmware), the all-in-one no longer functions. In this case, a firmware-recovery DIMM is available from HP.

Firmware-recovery DIMM

A firmware-recovery DIMM (RDIMM) can be obtained from HP in the rare event that the firmware in the flash memory becomes corrupted. When the DIMM is installed in the DIMM slot on the formatter and the all-in-one is turned on, the DIMM loads the latest firmware code into the product.

To use the RDIMM

1. Order a RDIMM from HP. Retain the return mailer.
2. Turn off the all-in-one.
3. Install the RDIMM in the DIMM slot. See Removing and replacing a DIMM on page 30.
4. Turn on the all-in-one. The RDIMM takes a few minutes to automatically restore both blocks of firmware code. Wait until the message **Complete** appears on the control-panel display.

Download Free Service Manual and Resetter Printer at http://printer1.blogspot.com

Download Free Service Manual and Resetter Printer at http://printer1.blogspot.com

7 Parts

- Accessories and ordering information
- Supplies
- Memory
- Cable and interface accessories
- Paper-handling accessories
- Scanner/ADF replacement parts
- Control-panel bezels
- Supplementary documentation and support
- Troubleshooting diagrams
- How to use the parts lists and diagrams
- Scanner and ADF assemblies
- Scanner components
- ADF components
- Convenience stapler components (HP LJ 3392 only)
- Formatter, LIU, HP jewel, and nameplate
- External covers and panels
- Internal components (1 of 4)
- Internal components (2 of 4)
- Internal components (3 of 4)
- Internal components (4 of 4)
- Engine-controller assembly
- Main-drive assembly
- Duplexing-drive assembly
- Tray 2 cassette and tray 3 cassette/feeder
- Duplexing assembly

Download Free Service Manual and Resetter Printer at http://printer1.blogspot.com

- Fuser assembly
- Alphabetical parts list
- Numerical parts list

Download Free Service Manual and Resetter Printer at http://printer1.blogspot.com

Accessories and ordering information

Order replacement parts from the following Web sites:

- HP Parts Store: www.hp.com/buy/parts
- Partsurfer: www.partsurfer.hp.com
- HP Parts Portal: www.hp.com/go/HPparts

Order supplies from the following Web sites:

- North America: http://www.hp.com/go/ordersupplies-na
- Europe and Middle East: http://www.hp.com/go/ordersupplies-emea
- Asia Pacific countries/regions: http://www.hp.com/go/ordersupplies-ap
- Latin America: http://www.hp.com/go/ordersupplies-la

Download Free Service Manual and Resetter Printer at http://printer1.blogspot.com

Supplies

Item	Description	Part number
Black print cartridge	Average yield for the standard print cartridge is approximately 2,500 pages. Average yield for the standard print cartridge is approximately 6,000 pages Actual yield depends on use.	Q5949A (standard) Q5949X (high capacity)
Staple cassette (2 pack)	1,500-staple capacity each	Q7432A (retail) Q7432–67001 (service)
Pickup roller	Tray 2 and optional tray 3	RL1-0540-00CN
Separation pad	Tray 2 and optional tray 3	RM1-1292-000CN

Memory

Item	Description	Part number
Memory upgrades (DIMMs)	The standard 96 MB of memory in the all-in-one can be expanded to up to 224 MB using the additional DIMM slot. 32 MB	C7845A
Memory upgrades (DIMMs)	64 MB	Q1887A
Memory upgrades (DIMMs)	128 MB	C9121A

Cable and interface accessories

Item	Description	Part number
USB cable	2-meter (6.56 feet) standard USB-compatible device connector	C6518A
Fax cord	Two-wire phone cord adapter.	8121–0811
Fax dongle	Two-wire to four-wire adapter (US)	Q3093–80004
Power cord	1.8 meter (6 feet) US/Canada	8120-8382
Power cord	1.8 meter (6 feet) Europe	8121-0516
Power cord	1.8 meter (6 feet) Switzerland	8121-0519
Power cord	1.8 meter (6 feet) United Kingdom	8121-0517
Power cord	1.8 meter (6 feet) Danish	8121-0518
Power cord	1.8 meter (6 feet) South America	8121-0520
Power cord	1.8 meter (6 feet) Israel	8121-0521

Download Free Service Manual and Resetter Printer at http://printer1.blogspot.com

Paper-handling accessories

Item	Description	Part number
Optional tray 3 cassette/feeder	250-sheet input tray/feeder for standard sizes. Only one optional 250-sheet tray can be installed.	Q7556A (new) Q7556-67901 (service)
Tray 2 cassette	250-sheet input tray for standard sizes.	RM1-1292-000CN
Staple cassette (2 pack)	1,500-staple capacity each	Q7432A (retail) Q7432–67001 (service)

Download Free Service Manual and Resetter Printer at http://printer1.blogspot.com

Scanner/ADF replacement parts

Item	Part number
PKG FGI ASSY LJ3390/3392 SSA (scanner assembly)	Q6500-67902
PKG FGI ASSY LJ3390/3392 ADF (ADF assembly)	Q6500-67903
LJ3390/3392 ADF cover replacement kit	Q6500-67901
ADF flag replacement kit	Q3948-67902
LJ3390/3392 input tray assembly	Q6500-60119
Clean out ADF	C7309-40153
ADF pick roller assembly	5851-2559
ADF separation pad	Q2665-60125
ADF assembly hinge replacement kit	Q3948-67905
LJ 3390/3392 ADF window replacement kit	Q6500-67904

Download Free Service Manual and Resetter Printer at http://printer1.blogspot.com

Control-panel bezels

Table 7-1 Control-panel bezels

Item	Language	Part number
Control-panel bezel	English	Q6500-40006
Control-panel bezel	French	Q6500-40010
Control-panel bezel	German	Q6500-40009
Control-panel bezel	German (unpainted)	Q6500-40031
Control-panel bezel	Italian	Q6500-40012
Control-panel bezel	Spanish	Q6500-40007
Control-panel bezel	Danish	Q6500-40016
Control-panel bezel	Dutch	Q6500-40011
Control-panel bezel	Finnish	Q6500-40015
Control-panel bezel	Norwegian	Q6500-40014
Control-panel bezel	Portuguese	Q6500-40008
Control-panel bezel	Swedish	Q6500-40013
Control-panel bezel	Czech	Q6500-40018
Control-panel bezel	Hungarian	Q6500-40019
Control-panel bezel	Polish	Q6500-40020
Control-panel bezel	Russian	Q6500-40017
Control-panel bezel	Slovak	Q6500-40021
Control-panel bezel	Turkish	Q6500-40022
Control-panel bezel	Arabic	Q6500-40025
Control-panel bezel	Greek	Q6500-40023
Control-panel bezel	Hebrew	Q6500-40024
Control-panel bezel	Korean	Q6500-40027
Control-panel bezel	Simplified Chinese	Q6500-40028
Control-panel bezel	Traditional Chinese	Q6500-40026
Control-panel bezel	Thai	Q6500-40029
Control-panel bezel	Vietnamese	Q6500-40030

Download Free Service Manual and Resetter Printer at http://printer1.blogspot.com

Supplementary documentation and support

Table 7-2 Service and training support

Item	Part number
Service manual (this manual)	Q6500–90901
Service, support, and training CD	Q6500–60129

A printed copy of the user guide is available in the following languages.

Table 7-3 User guides

Language	Part number
English	Q6500–90909
Chinese, simplified	Q6500–90919
Czech	Q6500–90910
Dutch	Q6500–90911
French	Q6500–90912
German	Q6500–90913
Hungarian	Q6500–90914
Italian	Q6500–90915
Korean	Q6500–90916
Polish	Q6500–90917
Russian	Q6500–90918
Spanish, Castilian	Q6500–90920
Swedish	Q6500–90921
Thai	Q6500–90923
Traditional Chinese	Q6500–90922
Turkish	Q6500–90924

A printed copy of the getting started guide is available in the following languages.

Table 7-4 Getting started guide

Language	Part number
Arabic	Q6500–90905
Bulgarian	Q6500–90907
Chinese, simplified	Q6500–90908
Croation	Q6500–90907

Download Free Service Manual and Resetter Printer at http://printer1.blogspot.com

Table 7-4 Getting started guide (continued)

Language	Part number
Czech	Q6500–90906
Danish	Q6500–90904
Dutch	Q6500–90903
English	Q6500–90903, Q6500–90904, Q6500–90905, Q6500–90906, Q6500–90907, Q6500–90908,
English only	Q6500–90902
Estonian	Q6500–90905
Finnish	Q6500–90904
French	Q6500–90903
German	Q6500–90903
Greek	Q6500–90904
Hebrew	Q6500–90904
Hungarian	Q6500–90906
Italian	Q6500–90903
Kazakh	Q6500–90905
Korean	Q6500–90908
Latvian	Q6500–90905
Lithuanian	Q6500–90905
Norwegian	Q6500–90904
Polish	Q6500–90906
Portuguese	Q6500–90903
Romanian	Q6500–90907
Russian	Q6500–90905
Slovak	Q6500–90906
Slovenian	Q6500–90907
Spanish	Q6500–90903
Swedish	Q6500–90904
Thai	Q6500–90908
Traditional Chinese	Q6500–90908
Turkish	Q6500–90907

Table 7-5 Technical support Web sites

HP Customer Care Online	www.hp.com/go/support

Download Free Service Manual and Resetter Printer at http://printer1.blogspot.com

Table 7-5 Technical support Web sites (continued)

Software drivers, support documentation, and answers to frequently asked questions	
HP Technical Training (North America) Classes and schedules	www.hp.com/go/resellertraining

Download Free Service Manual and Resetter Printer at http://printer1.blogspot.com

Troubleshooting diagrams

- Repetitive image defects
- Interface connectors
- Formatter connectors
- Line interface unit (LIU)
- Solenoids
- Switches and sensors
- Rollers and pads
- PCAs (base unit)
- Major components (base unit)
- Scanner and ADF
- Circuit diagram

Repetitive image defects

If the all-in-one output has a consistent, repetitive defect, then use Table 7-6 Repetitive image defects on page 261 to determine which part needs to be replaced based on the measured distance between the repetitions of the defect.

NOTE The following table replaces the graphical repetitive defect ruler. You can make your own ruler by using these measurements.

Table 7-6 Repetitive image defects

Distance between identical defects	Dirty or damaged roller	Solution
37.7 mm (1.48 inches)	Primary charging roller	Replace the print cartridge.
43.0 mm (1.69 inches)	Registration roller	Replace the registration assembly (see Registration-roller assembly on page 168).
44.0 mm (1.73 inches)	Developing cylinder	Replace the print cartridge.
46.2 mm (1.82 inches)	Transfer roller	Replace the transfer roller.
56.5 mm (2.22 inches)	Fuser film	Replace the fuser (see Fuser on page 148).
69.0 mm (2.72 inches)	Pressure roller	Replace the fuser (see Fuser on page 148).
75.4 mm (2.97 inches)	Photosensitive drum	Replace the print cartridge.

Download Free Service Manual and Resetter Printer at http://printer1.blogspot.com

Interface connectors

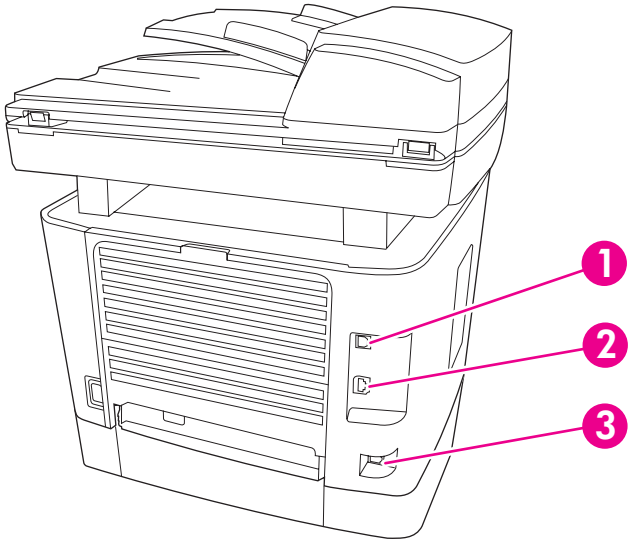

Figure 7-1 Interface connectors

1	Hi-speed USB 2.0 port
2	Network port
3	Fax ports

Download Free Service Manual and Resetter Printer at http://printer1.blogspot.com

Formatter connectors

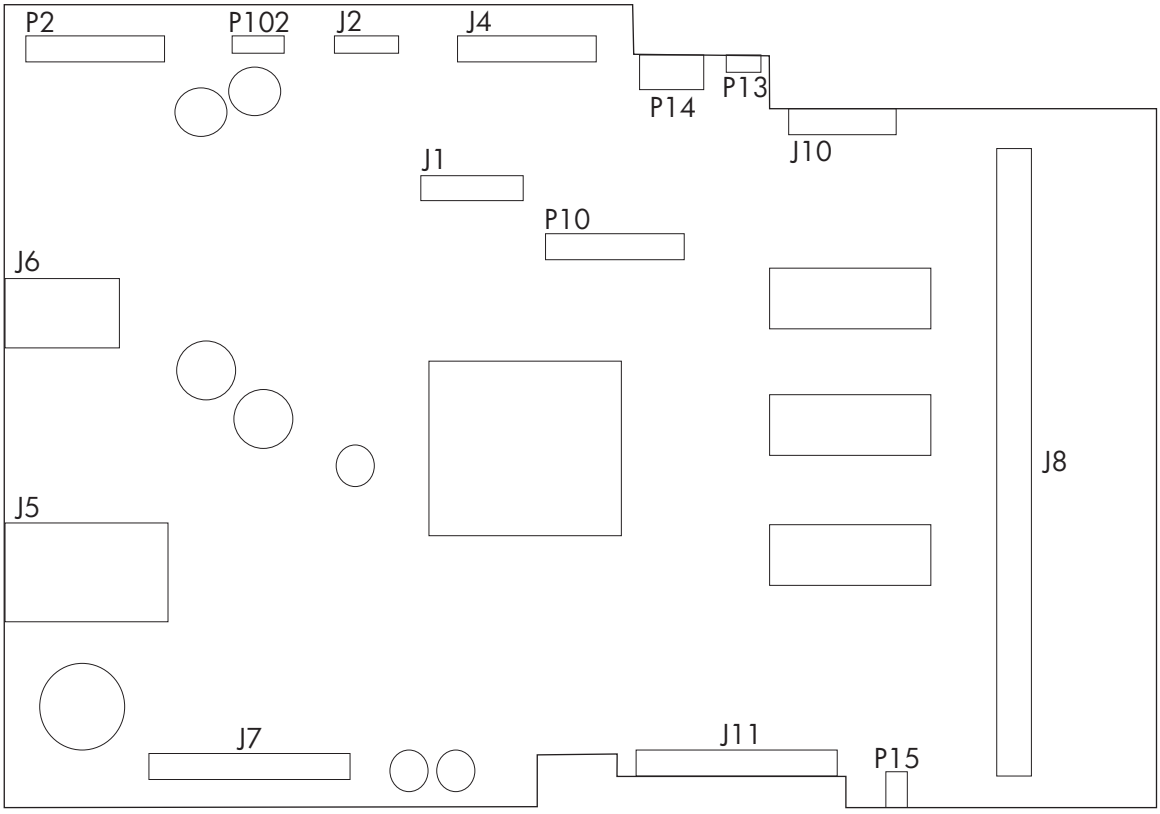

Figure 7-2 Formatter connectors

Item	Description
P2	ADF motor
P102	Not used
J2	Flatbed motor
J4	Scanner
P14	Laser/scanner motor
P13	Memory tag reader
J10	Laser/scanner
P10	Not used
J1	Control panel
J8	DIMM
P15	Speaker
J11	ECU
J7	Line interface unit (LIU)
J5	Network port
J6	Hi-speed USB 2.0 port

Download Free Service Manual and Resetter Printer at http://printer1.blogspot.com

Line interface unit (LIU)

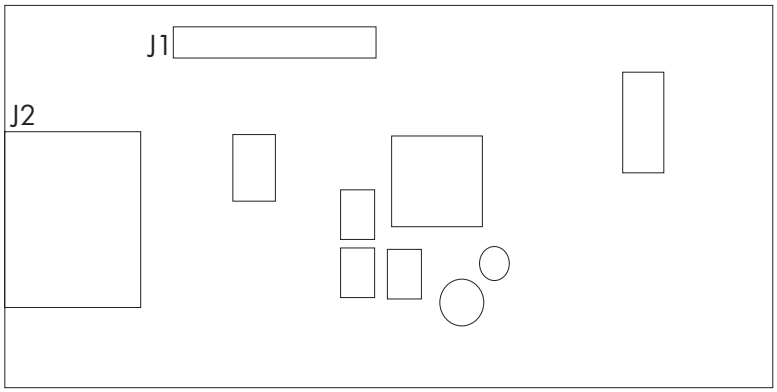

Figure 7-3 LIU connectors

Item	Description
J1	Formatter
J2	Fax ports

Solenoids

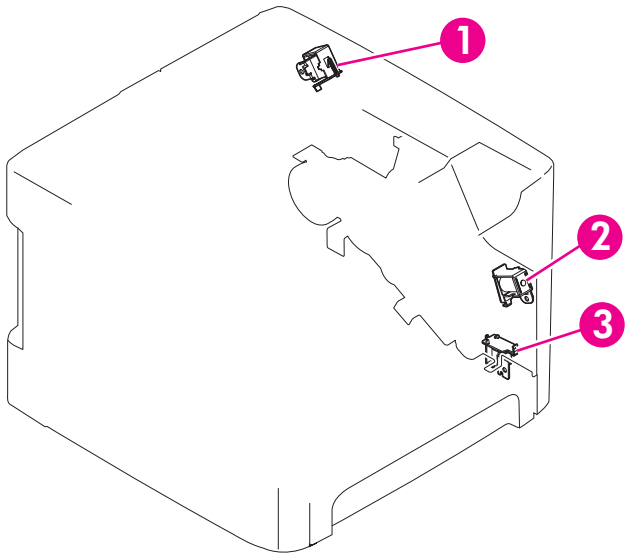

Figure 7-4 Solenoids

Item	Description
1	Duplex solenoid
2	Priority input slot (tray 1) pickup solenoid
3	Tray 2 pickup solenoid

Download Free Service Manual and Resetter Printer at http://printer1.blogspot.com

Switches and sensors

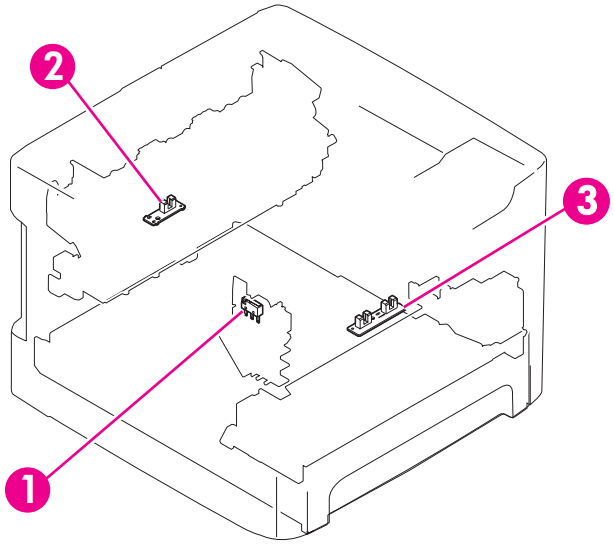

Figure 7-5 Switches and sensors

Item	Description
1	Interlock switch
2	Delivery sensor
3	Top-of-page sensor

Download Free Service Manual and Resetter Printer at http://printer1.blogspot.com

Rollers and pads

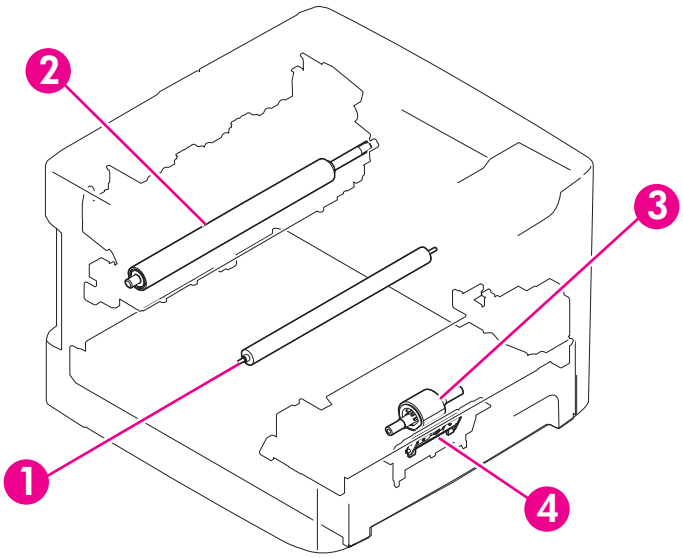

Figure 7-6 Rollers and pads

Item	Description
1	Transfer roller
2	Pressure roller
3	Pickup roller
4	Separation pad

Download Free Service Manual and Resetter Printer at http://printer1.blogspot.com

PCAs (base unit)

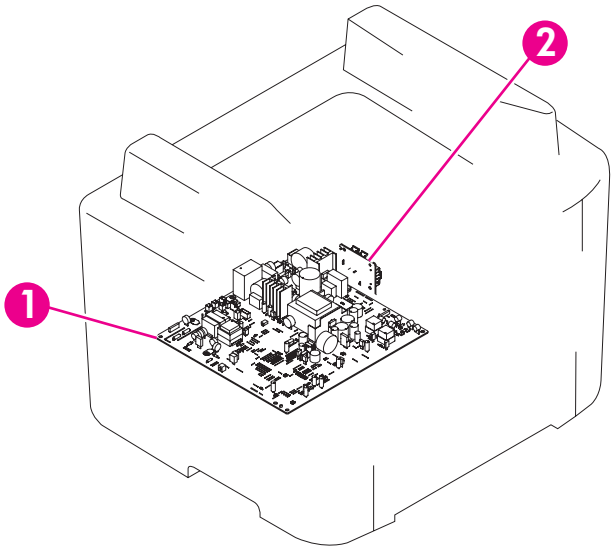

Figure 7-7 PCAs (base unit)

Item	Description
1	Engine-controller assembly (ECU)
2	Power-switch PCA

Download Free Service Manual and Resetter Printer at http://printer1.blogspot.com

Major components (base unit)

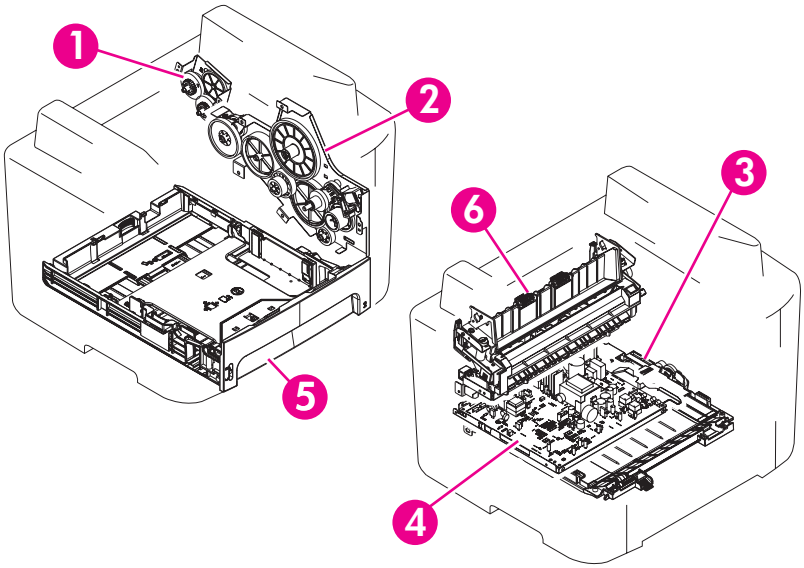

Figure 7-8 Major components (base unit)

Item	Description
1	Duplex-drive gears
2	Main drive assembly
3	Duplex-drive assembly
4	Engine-controller assembly (ECU)
5	Tray 2 cassette
6	Fuser

Download Free Service Manual and Resetter Printer at http://printer1.blogspot.com

Scanner and ADF

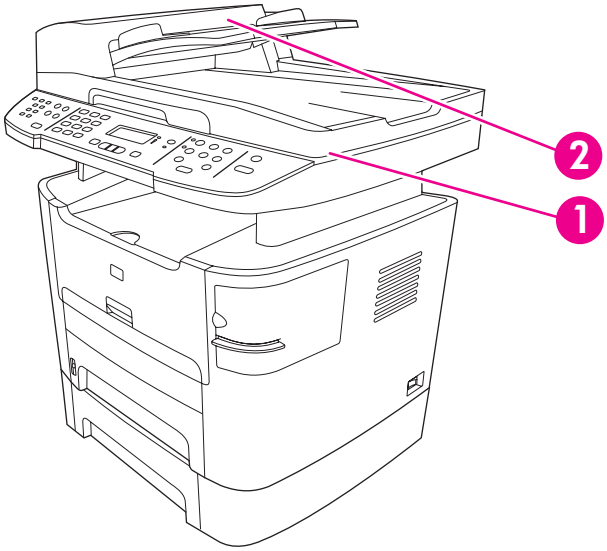

Figure 7-9 Scanner and ADF

Item	Description
1	Scanner
2	ADF

Download Free Service Manual and Resetter Printer at http://printer1.blogspot.com

Circuit diagram

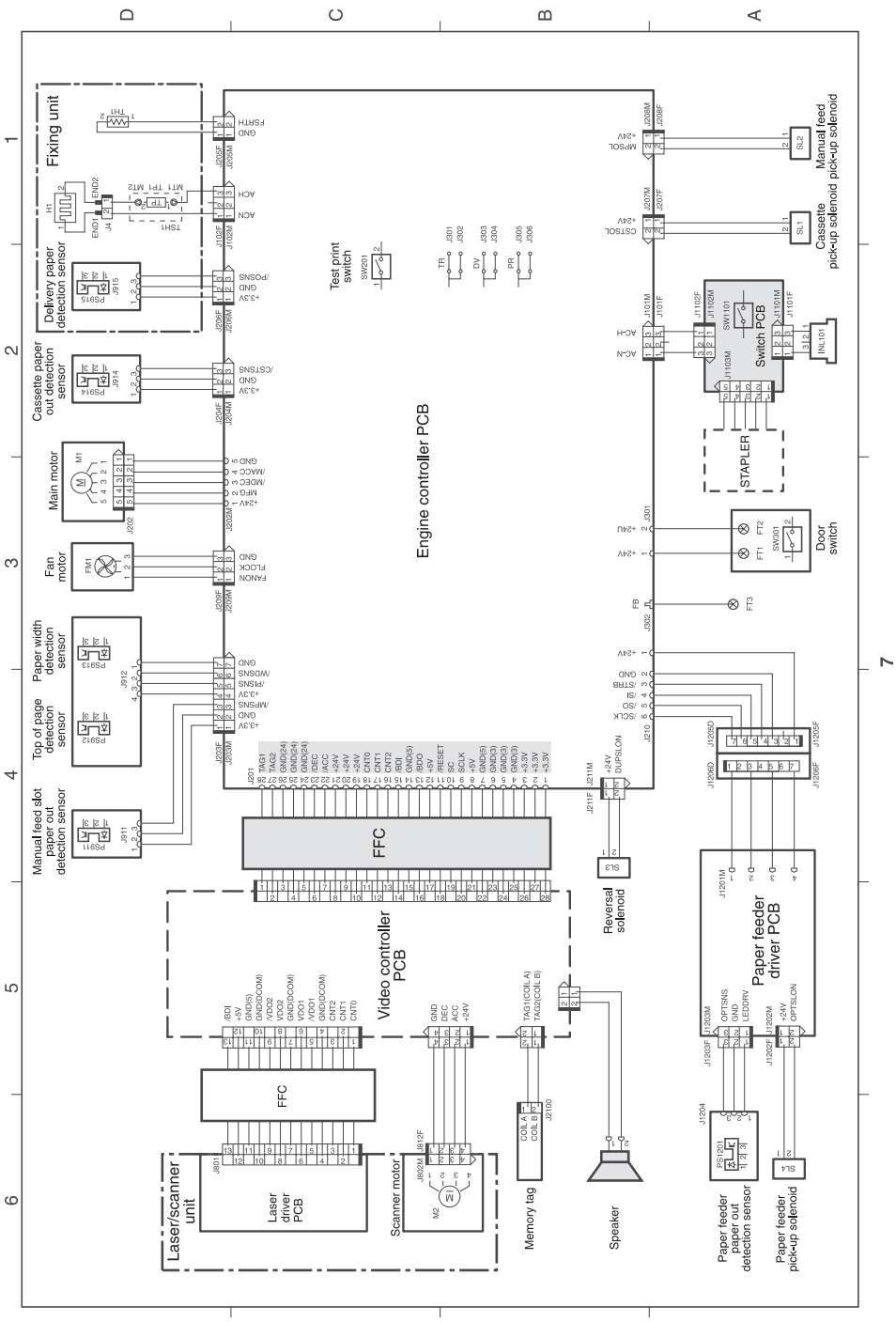

Figure 7-10 Circuit diagram

Download Free Service Manual and Resetter Printer at http://printer1.blogspot.com

How to use the parts lists and diagrams

The figures in this chapter show the major subassemblies in the all-in-one and their component parts. A parts list table follows each exploded view assembly diagram. Each table lists the item number, the associated part number, and the description of each part. If a part is not listed in the table, then it is not a field replacement unit (FRU).

CAUTION Be sure to order the correct part. When looking for part numbers for electrical components, pay careful attention to the voltage that is listed in the description column to ensure that the part number selected is for the correct all-in-one model.

NOTE In this manual, the abbreviation “PCA” stands for “printed circuit board assembly.” components described as a PCA might consist of a single circuit board or a circuit board plus other parts, such as cables and sensors.

Types of screws

Illustration	Description	Size	Part Number	Use
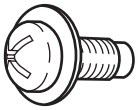	Screw, RS	M3X6 M4X12	XA9–1495–000CN XA9–0722–000CN	Used to secure metal to metal
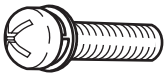	Screw w/washer	M3X8	XA9–1420–000CN	Used to secure metal components to metal components (for example, a ground wire to the frame)
	Screw, tapping	M3X6	XB9–1503–000CN	Used to secure anything to plastic
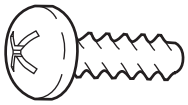	Screw, tapping, truss head	M4X10	XB4–7401–000CN	Used to secure anything to plastic

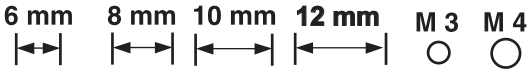

Download Free Service Manual and Resetter Printer at http://printer1.blogspot.com

Scanner and ADF assemblies

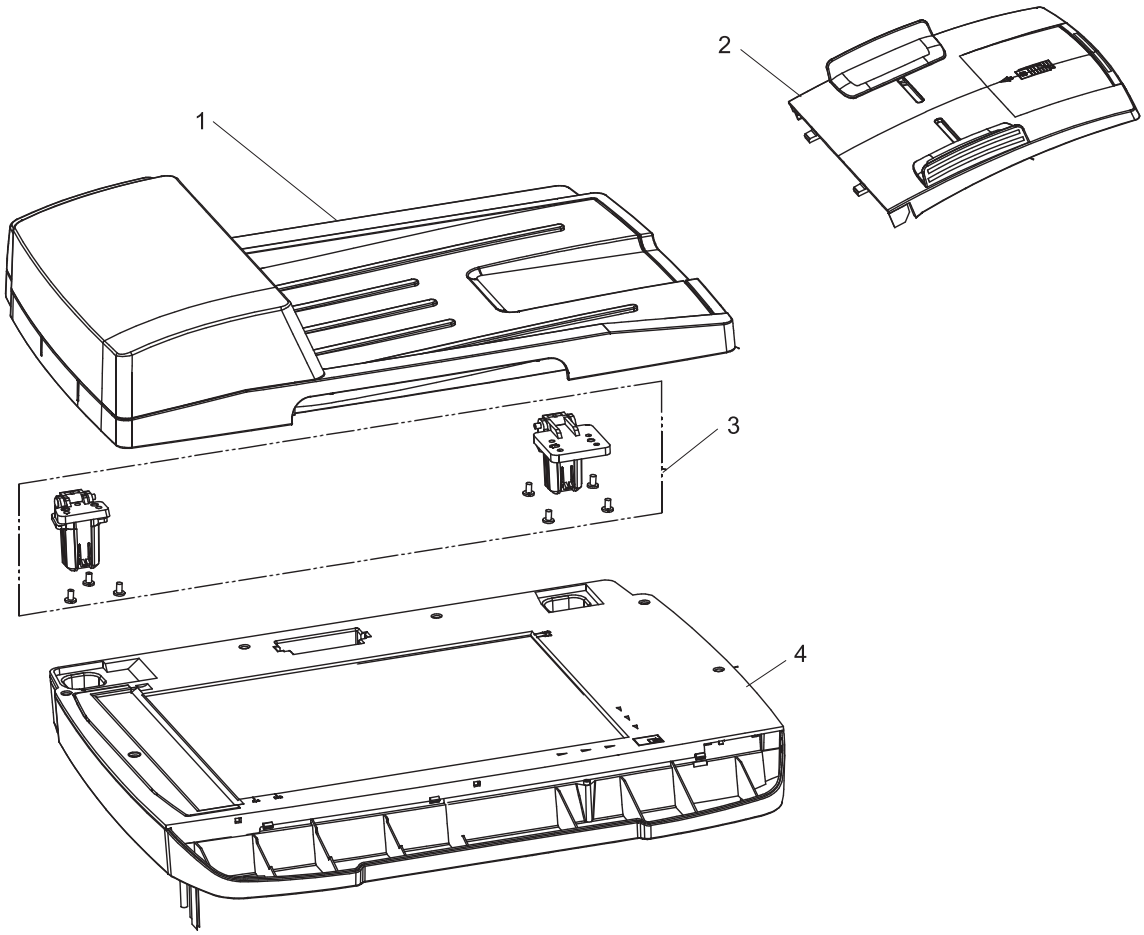

Figure 7-11 Scanner and ADF assemblies

Download Free Service Manual and Resetter Printer at http://printer1.blogspot.com

Table 7-7 Scanner and ADF assemblies

Ref	Description	Part number	Qty
1	ADF PKG FGI ASSY (automatic document feeder)	Q6500-67903	1
2	Input tray assembly LJ3390/3392	Q6500-60119	1
3	ADF hinge replacement kit	Q3948-67905	1
4	SSA PKG FGI ASSY (scanner flatbed assembly)	Q3948-67905	1

Download Free Service Manual and Resetter Printer at http://printer1.blogspot.com

Scanner components

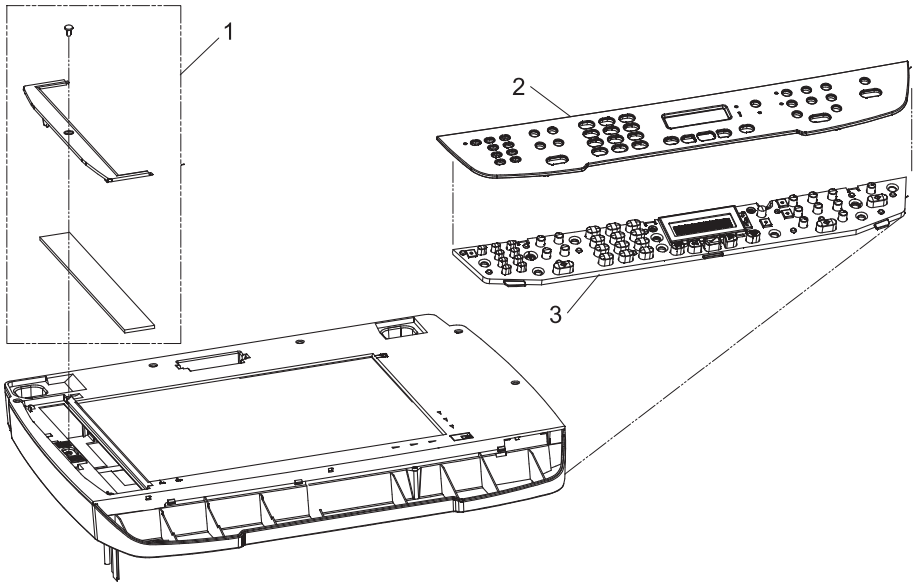

Figure 7-12 Scanner assemblies

Download Free Service Manual and Resetter Printer at http://printer1.blogspot.com

Table 7-8 Scanner components

Ref	Description	Part number	Qty
1	ADF window replacement kit (HP LJ 3390/3392)	Q6500-67904	1
2	Bezel, control panel	See Control-panel bezels on page 257.	1
3	Control panel	Q6500–60104	1

Download Free Service Manual and Resetter Printer at http://printer1.blogspot.com

ADF components

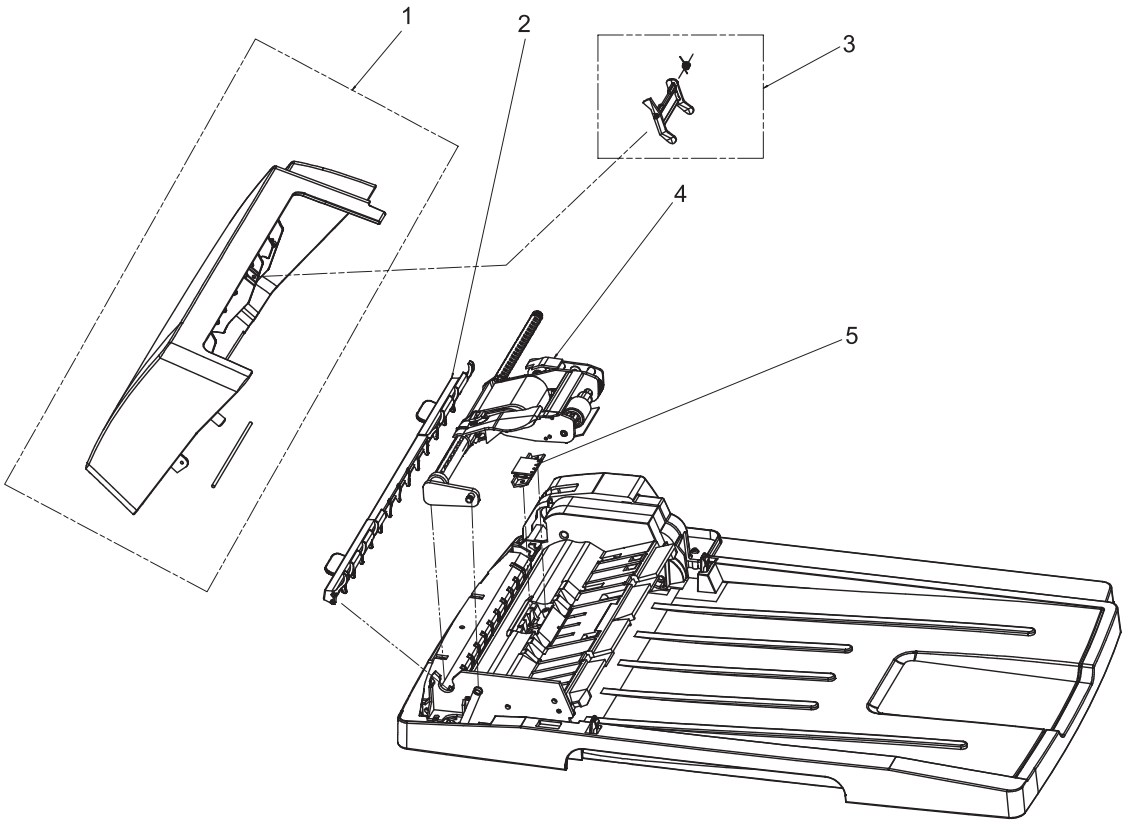

Figure 7-13 ADF components

Download Free Service Manual and Resetter Printer at http://printer1.blogspot.com

Table 7-9 ADF components

Ref	Description	Part number	Qty
1	ADF cover replacement kit	Q6500-67901	1
2	ADF cleanout part	C7309-40153	1
3	ADF flag replacement kit	Q3948-67902	1
4	ADF pickup roller assembly	5851-2559	1
5	ADF separation pad	Q2665-60125	1

Download Free Service Manual and Resetter Printer at http://printer1.blogspot.com

Convenience stapler components (HP LJ 3392 only)

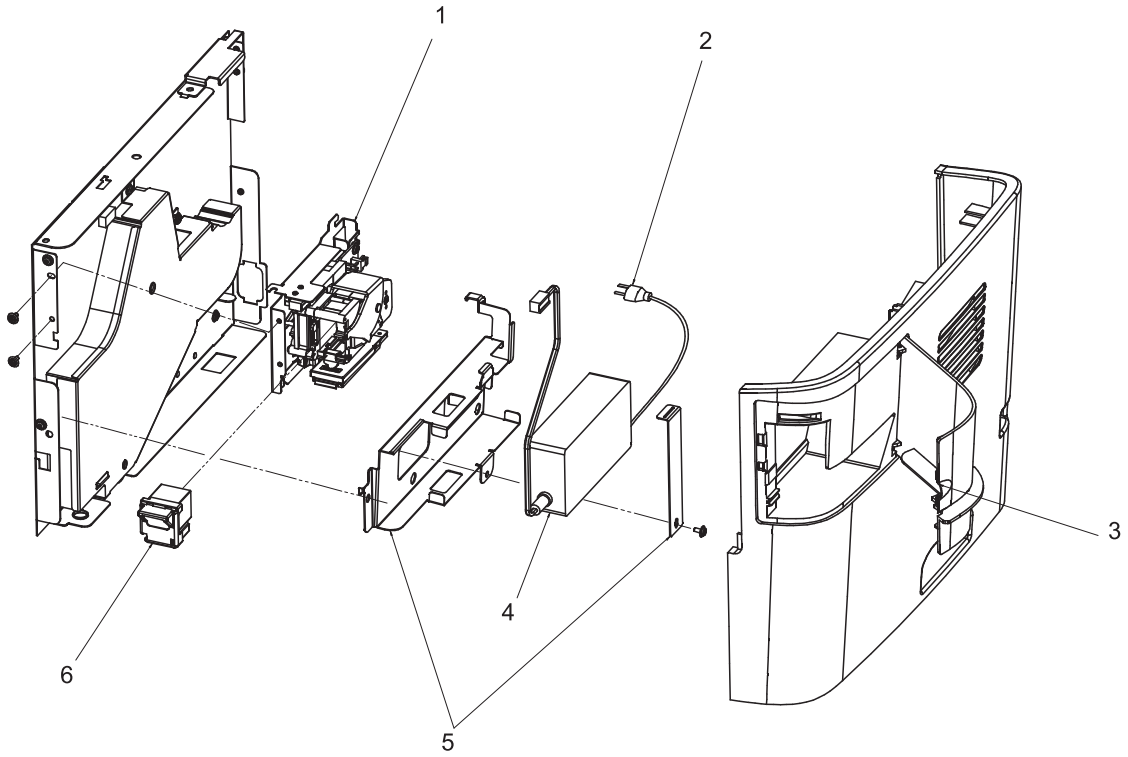

Figure 7-14 Convenience stapler components (HP LJ 3392 only)

Download Free Service Manual and Resetter Printer at http://printer1.blogspot.com

Table 7-10 Convenience stapler components (HP LJ 3392 only)

Ref	Description	Part number	Qty
1	Convenience stapler mechanism HP LJ 3392 (replacement)	Q7429-67101	1
2	Convenience stapler ac inlet cable HP LJ 3392	Q6501-60101	1
3	Convenience stapler cover door HP LJ 3392	RC1-7523-000CN	1
4	Convenience stapler power supply HP LJ 3392	Q7429-60501	1
5	Convenience stapler power supply bracket and strap HP LJ 3392	Q6500-00006	1
6	Convenience stapler cassette (2-pack) HP LJ3392	Q7432–67001	1

Download Free Service Manual and Resetter Printer at http://printer1.blogspot.com

Formatter, LIU, HP jewel, and nameplate

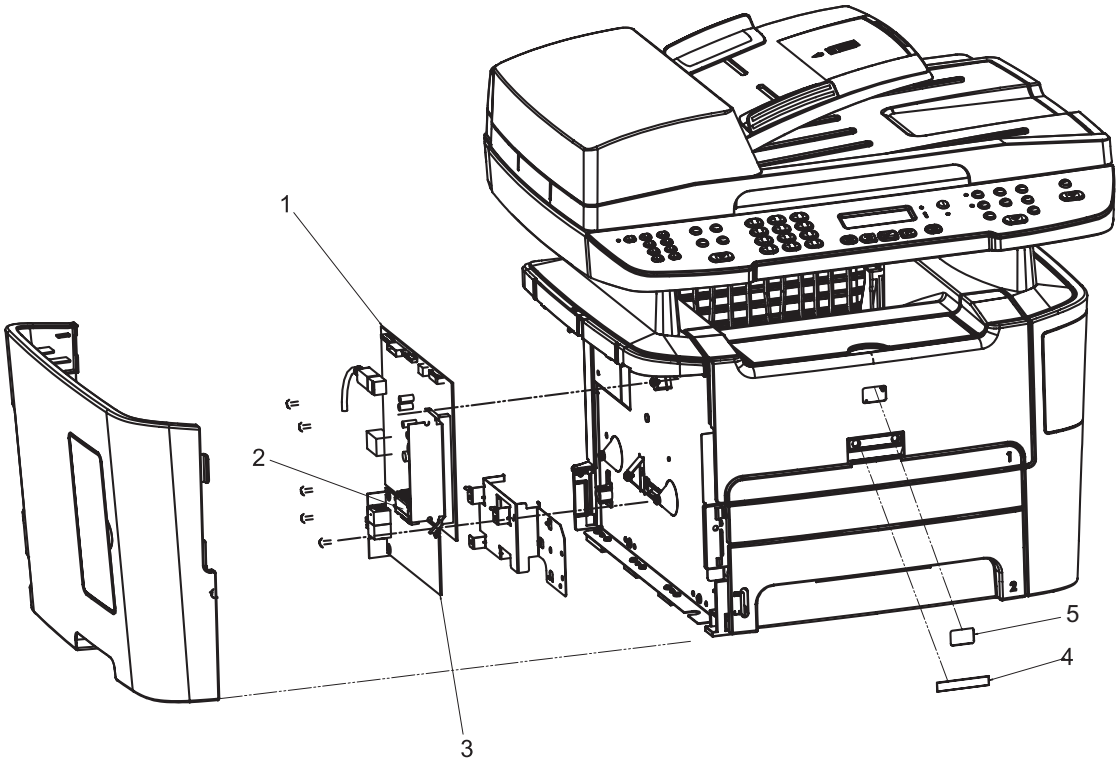

Figure 7-15 Formatter, LIU, HP jewel, and nameplate

Download Free Service Manual and Resetter Printer at http://printer1.blogspot.com

Table 7-11 Formatter, LIU, HP jewel, and nameplate

Ref	Description	Part number	Qty
1	Formatter PCA	Q6445-60001	1
2	LIU/Formatter FFC	Q6500-60111	1
3	LIU (line interface unit) US/WW non ROHS	Q3977-60001	1
3	LIU (line interface unit) EMEA non ROHS	Q3978-60002	1
4	Nameplate HP LJ 3390	Q6500-4000X	1
4	Nameplate HP LJ 3392	Q6501-4000X	1
5	Jewel, HP	7121-8043	1

Download Free Service Manual and Resetter Printer at http://printer1.blogspot.com

External covers and panels

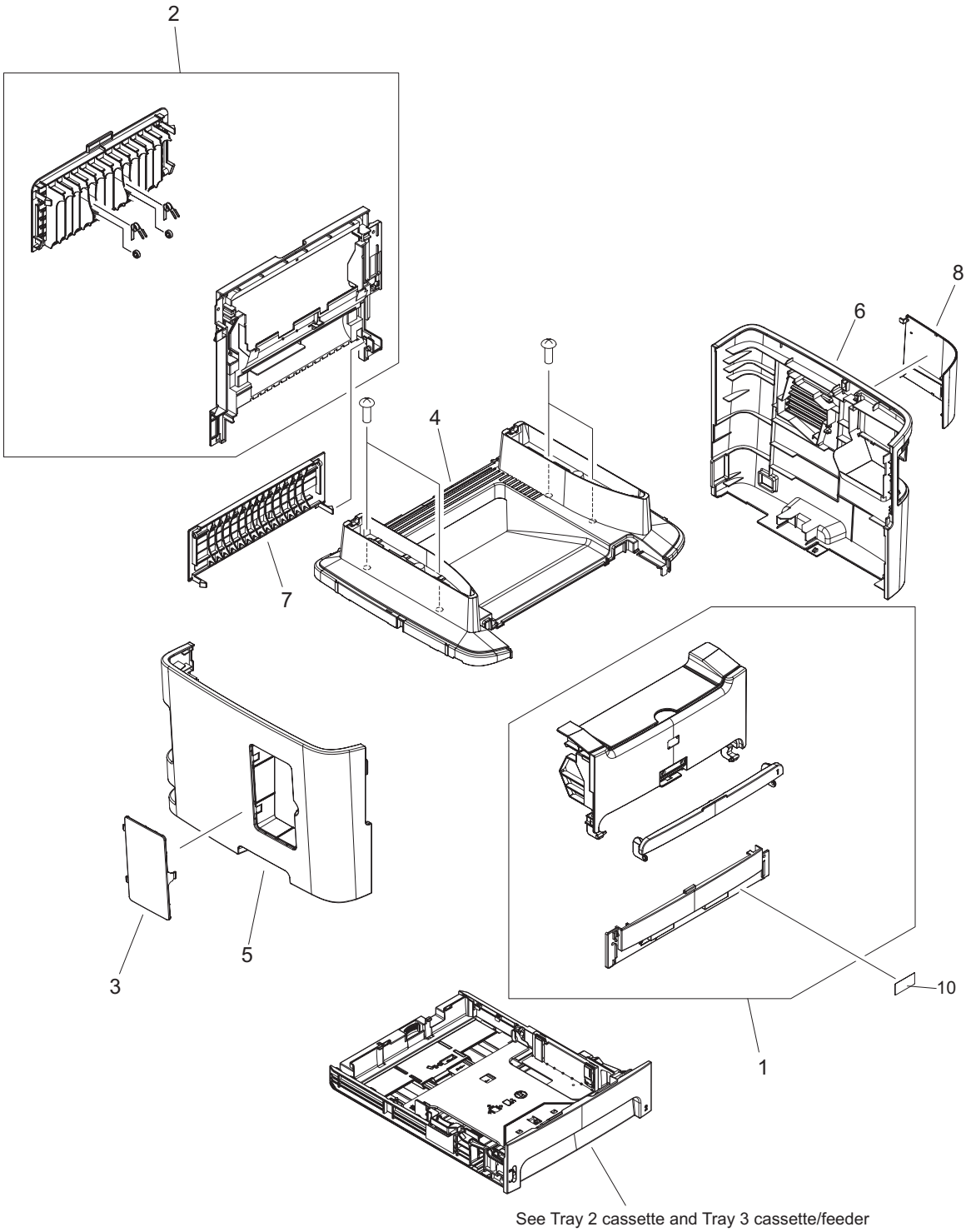

Figure 7-16 External covers and panels

Download Free Service Manual and Resetter Printer at http://printer1.blogspot.com

Table 7-12 External covers and panels

Ref	Description	Part number	Qty
1	Front cover assembly	RM1-2643-000CN	1
2	Rear cover assembly	RM1-1308-000CN	1
3	Cover DIMM	RC1-7510-000CN	1
4	Cover top	RC1-7508-000CN	1
5	Cover left	RC1-7509-000CN	1
6	Cover right	RC1-7511-000CN	1
7	Cover rear	RC1-3819-000CN	1
8	Cover dummy (stapler plug; HP LJ 3390))	RC1-7512-000CN	1
10	Label, stapler prohibition	RC1-3794-000CN	1

Download Free Service Manual and Resetter Printer at http://printer1.blogspot.com

Internal components (1 of 4)

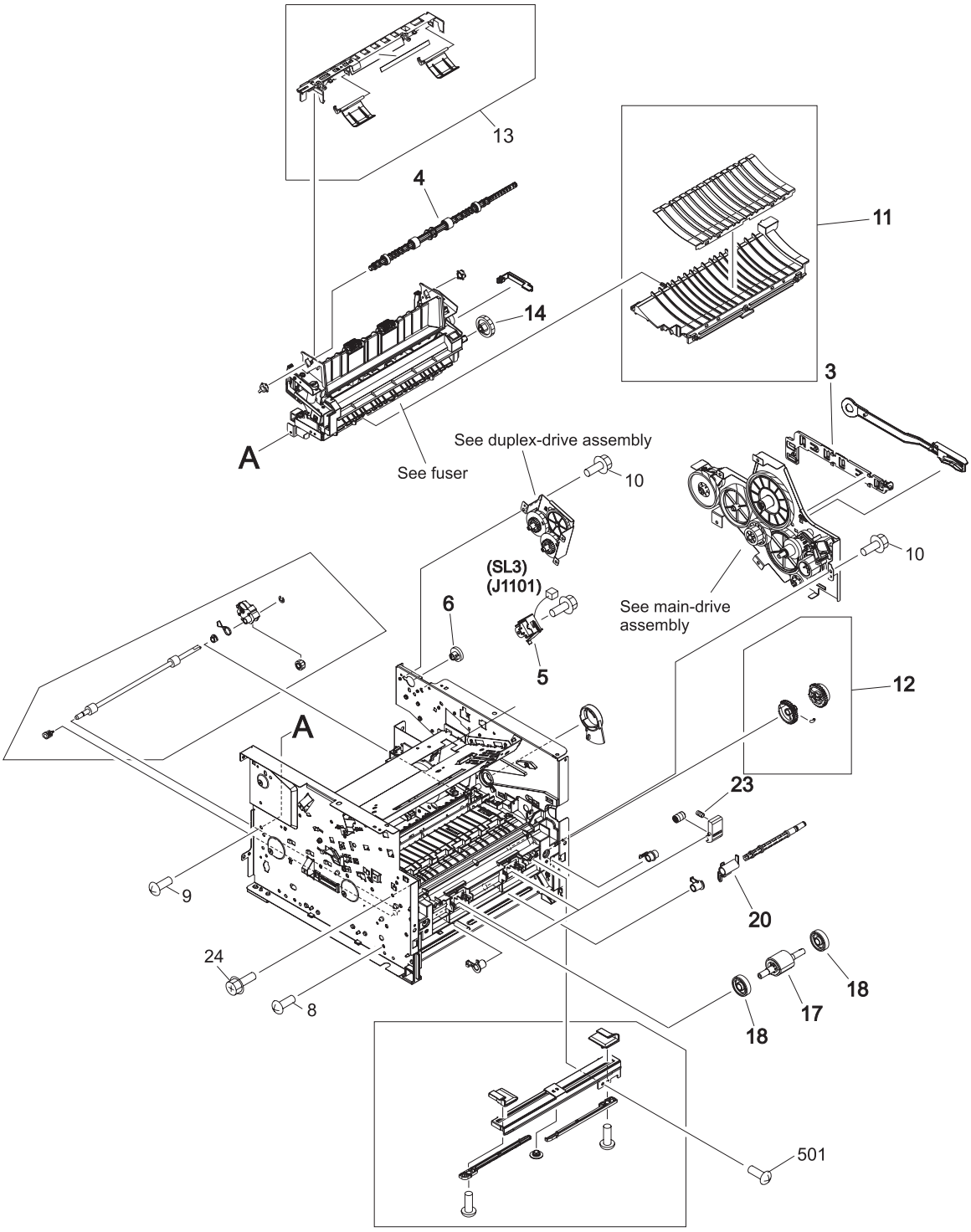

Figure 7-17 Internal components (1 of 4)

Download Free Service Manual and Resetter Printer at http://printer1.blogspot.com

Table 7-13 Internal components (1 of 4)

Ref	Description	Part number	Qty
3	Guide, dc cable 2	RC1-3731-000CN	1
4	Roller, face down	RL1-0527-000CN	1
5	Solenoid	RK2-0910-000CN	1
8	Screw, RS 3X6	XA9-1495-000CN	28
9	Screw, Tap 3X6	XA9-1503-000CN	5
10	Screw, RS M3X8	XA9-1504-000CN	7
6	Gear, 19T	RU5-0332-000CN	1
11	Paper-feed guide assembly	RM1-1286-000CN	1
12	Paper-pickup gear assembly	RM1-1301-000CN	1
13	Paper-retaining assembly	RM1-1306-000CN	1
14	Gear, 29T	RM1-1286-000CN	1
17	Roller, paper pickup	RL1-0540-000CN	1
18	Roller, paper-pickup idler	RC1-3470-000CN	2
20	Flag, paper sensing	RC1-3472-000CN	1
23	Spring, compression	RU5-2323-000CN	2
24	Screw, W/Washer M3X8	XB4-5300-805CN	4
501	Screw, Tapping truss head M4X10	XB4-5300-805CN	4

Download Free Service Manual and Resetter Printer at http://printer1.blogspot.com

Internal components (2 of 4)

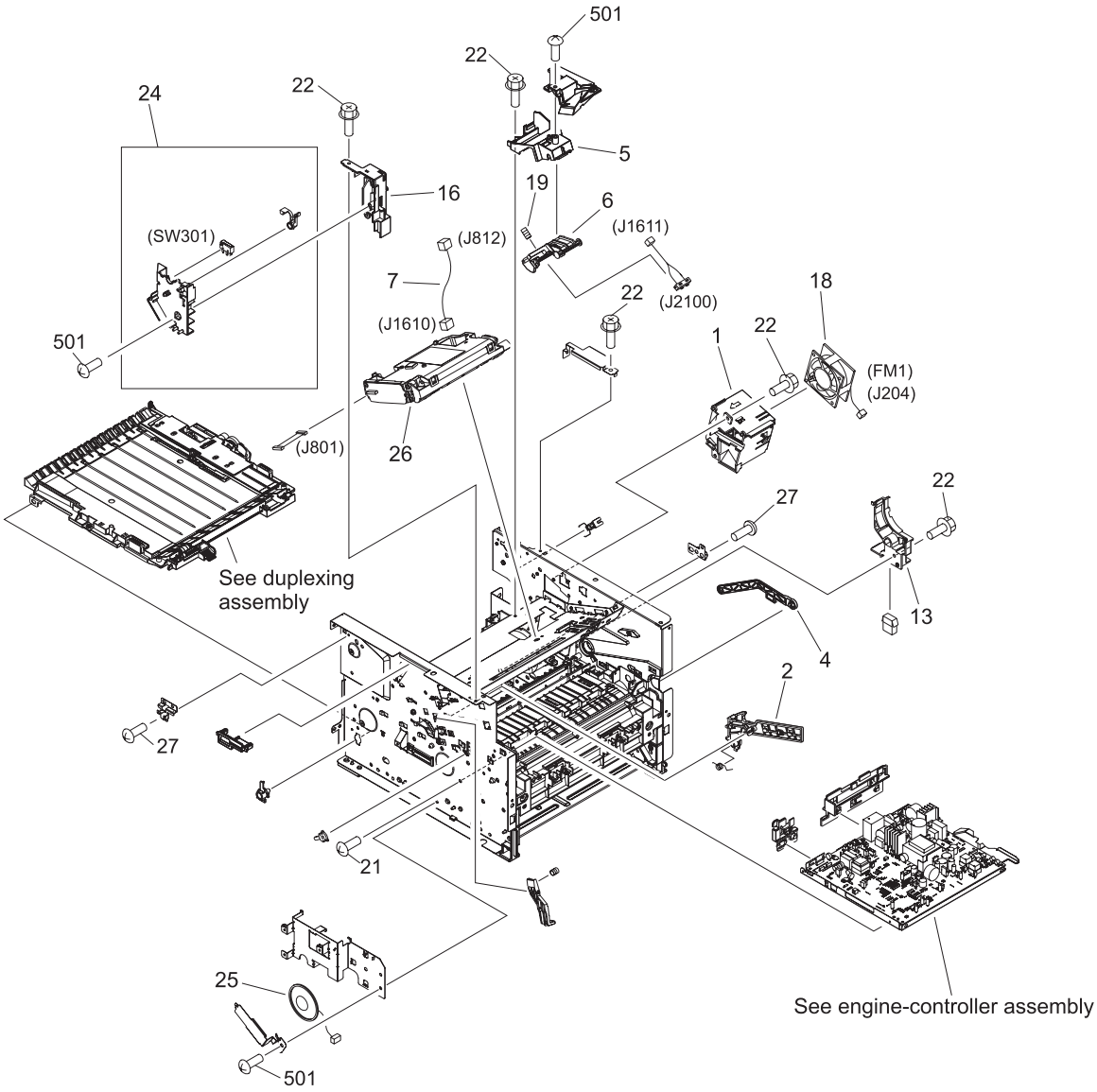

Figure 7-18 Internal components (2 of 4)

Download Free Service Manual and Resetter Printer at http://printer1.blogspot.com

Table 7-14 Internal components (2 of 4)

Ref	Description	Part number	Qty
1	Holder, fan	RC1-7514-000CN	1
2	Guide, cartridge, left upper	RC1-3539-000CN	1
4	Arm, cam	RC1-3544-000CN	1
5	Holder, tag arm	RC1-35504-000CN	1
6	Arm, tag	RC1-3551-000CN	1
13	Holder, drawer	RC1-3728-000CN	1
16	Guide, cartridge, front	RC1-3844-000CN	1
18	Fan	RK2-0912-000CN	1
19	Spring, compression	RU5-2335-000CN	1
21	Screw, Tap M3X6	XA9-1503-000CN	4
22	Screw, RS M3X8	XA9-1504-000CN	8
24	Interlock assembly	RM1-2645-000CN	1
25	Speaker assembly	RM1-2571-000CN	1
26	Scanner assembly (laser/scanner)	RM1-1470-000CN	1
27	Screw, RS M3X6	XA9-1495-000CN	2
501	Screw, Tapping truss head M4X10	XB4-7401-005CN	17

Download Free Service Manual and Resetter Printer at http://printer1.blogspot.com

Internal components (3 of 4)

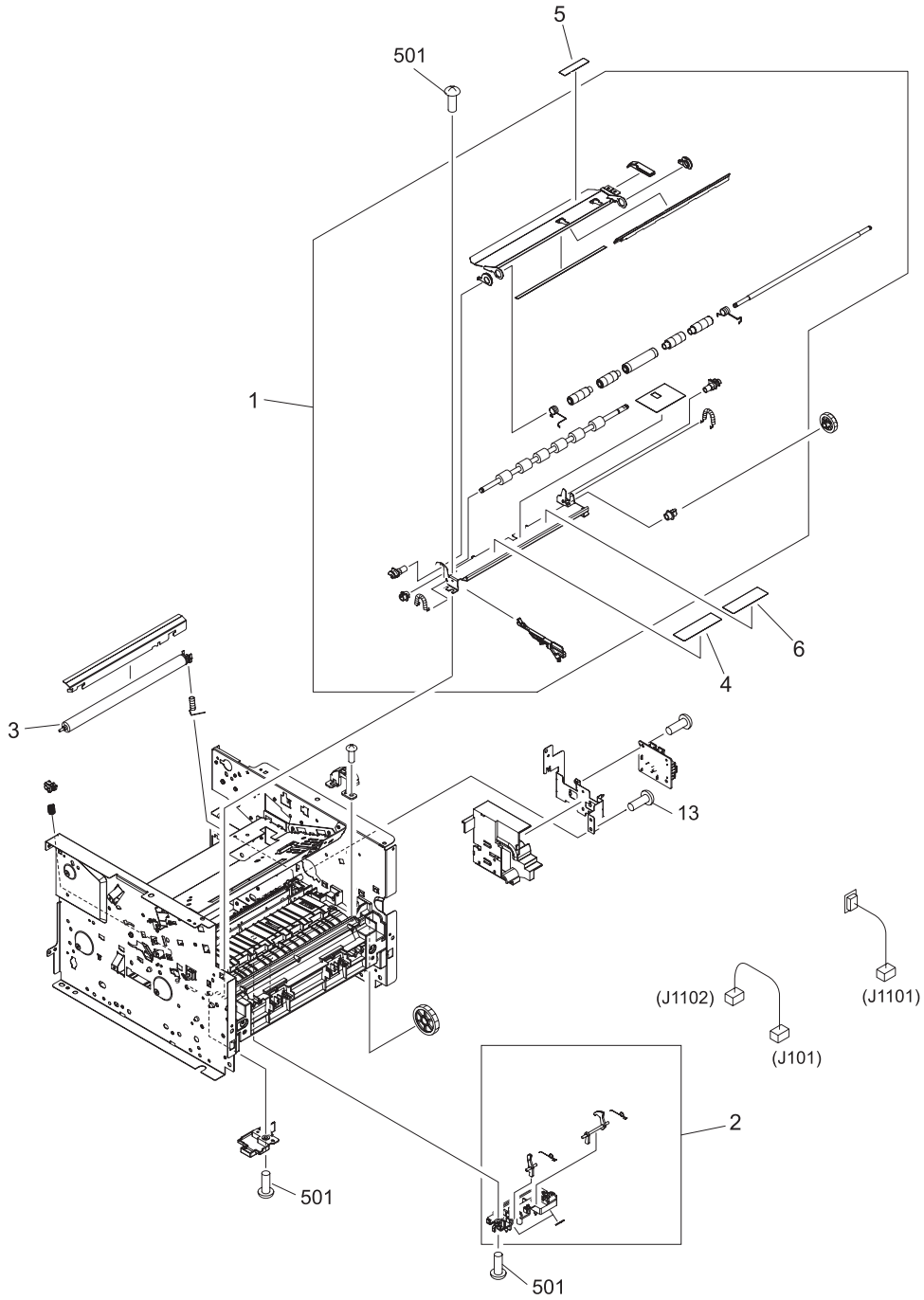

Figure 7-19 Internal components (3 of 4)

Download Free Service Manual and Resetter Printer at http://printer1.blogspot.com

Table 7-15 Internal components (3 of 4)

Ref	Description	Part number	Qty
1	Registration assembly	RM1-1281-000CN	1
2	Top-sensor assembly	RM1-1283-000CN	1
3	Roller, transfer	RM1-1471-000CN	1
4	Label, clear jam	RC1-7528-000CN	1
5	Label, transfer guide open	RC1-3796-000CN	1
6	Label, Fixing (fusing) pressure release	RC1-7529-000CN	1
13	Screw, RS M3X6	XA9-1495-000CN	2
501	Screw, Tapping truss head M4X10	XB4-7401-005CN	9

Download Free Service Manual and Resetter Printer at http://printer1.blogspot.com

Internal components (4 of 4)

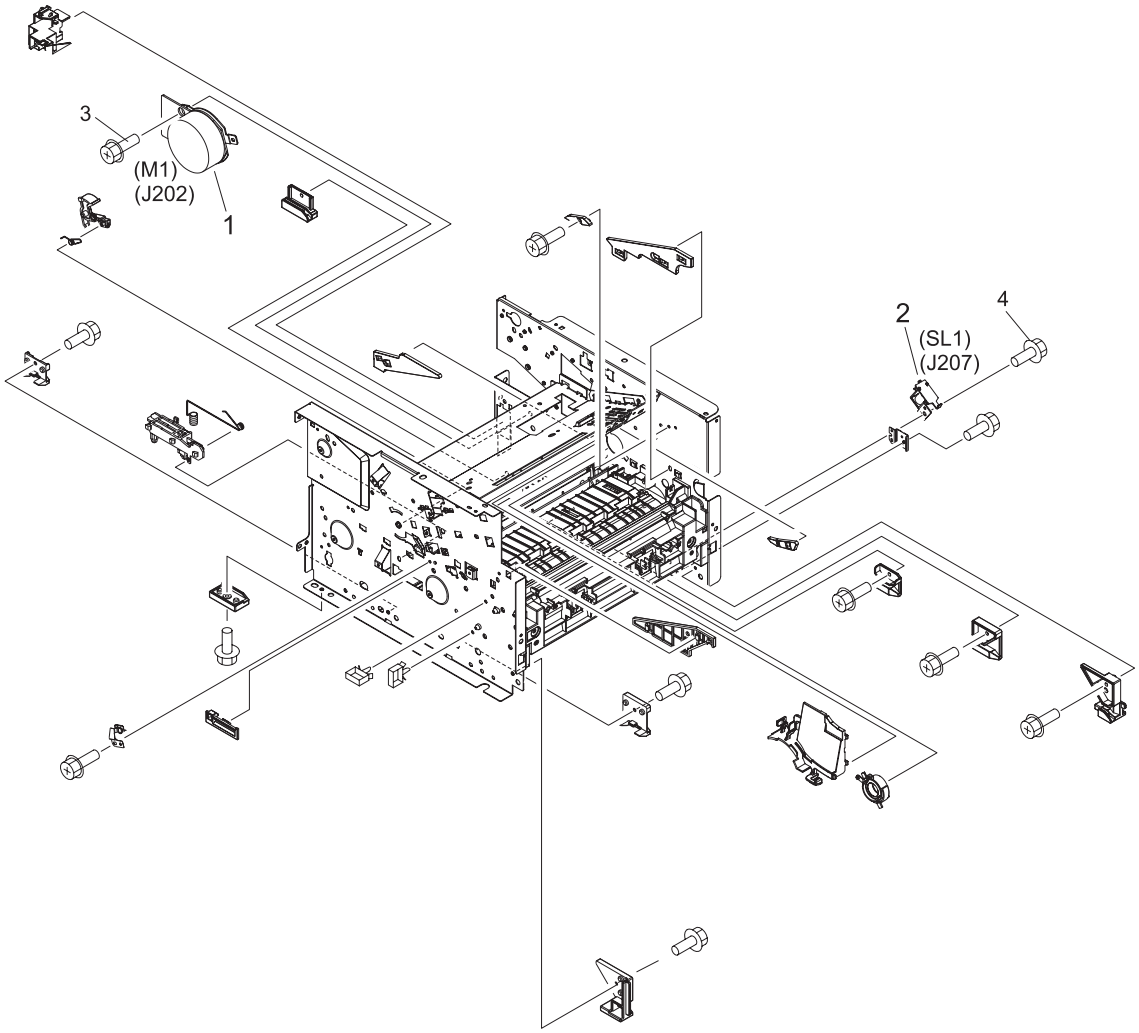

Figure 7-20 Internal components (4 of 4)

Download Free Service Manual and Resetter Printer at http://printer1.blogspot.com

Table 7-16 Internal components (4 of 4)

Ref	Description	Part number	Qty
1	Motor, dc (M1)	RK2-0418-000CN	1
2	Solenoid (SL1)	RK2-0424-000CN	1
3	Screw, RS M3X8	XA9-1504-000CN	1
4	Screw, RS M3X6	XA9-1495-000CN	1

Download Free Service Manual and Resetter Printer at http://printer1.blogspot.com

Engine-controller assembly

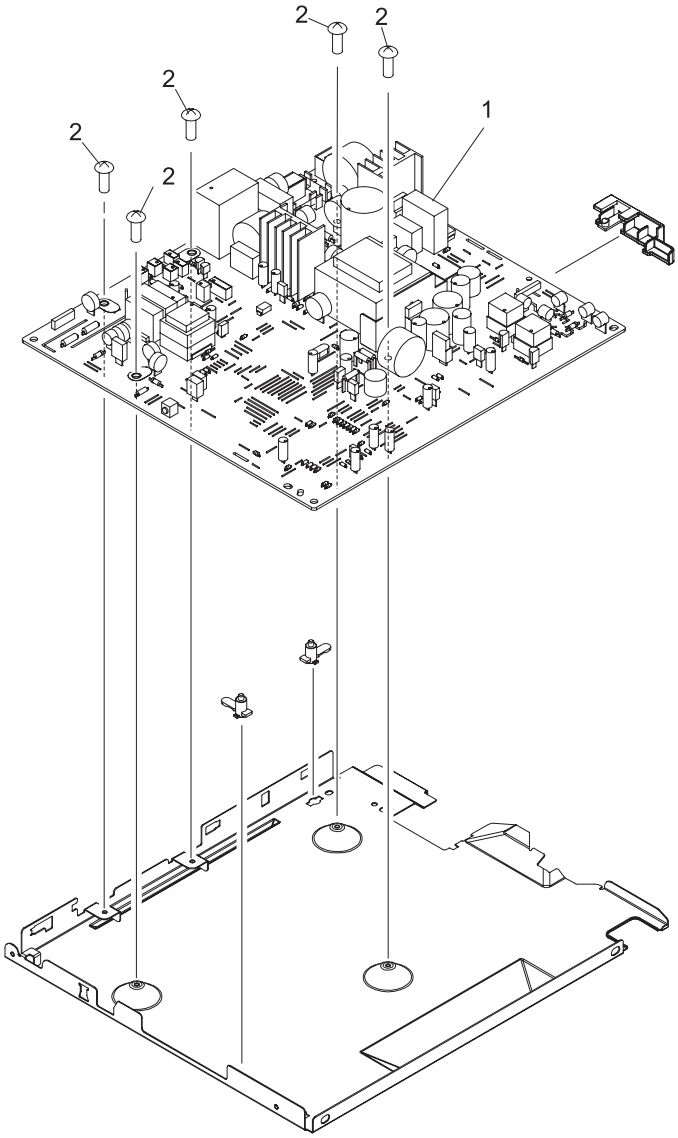

Figure 7-21 Engine-controller assembly

Download Free Service Manual and Resetter Printer at http://printer1.blogspot.com

Table 7-17 Engine-controller assembly

Ref	Description	Part number	Qty
1	Engine-controller PCA (110 to 127 v)	RM1-2566-000CN	1
1	Engine-controller PCA (220 to 240 v)	RM1-2567-000CN	1
2	Screw, W/Washer M3X8	XA9-1420-000CN	5

Download Free Service Manual and Resetter Printer at http://printer1.blogspot.com

Main-drive assembly

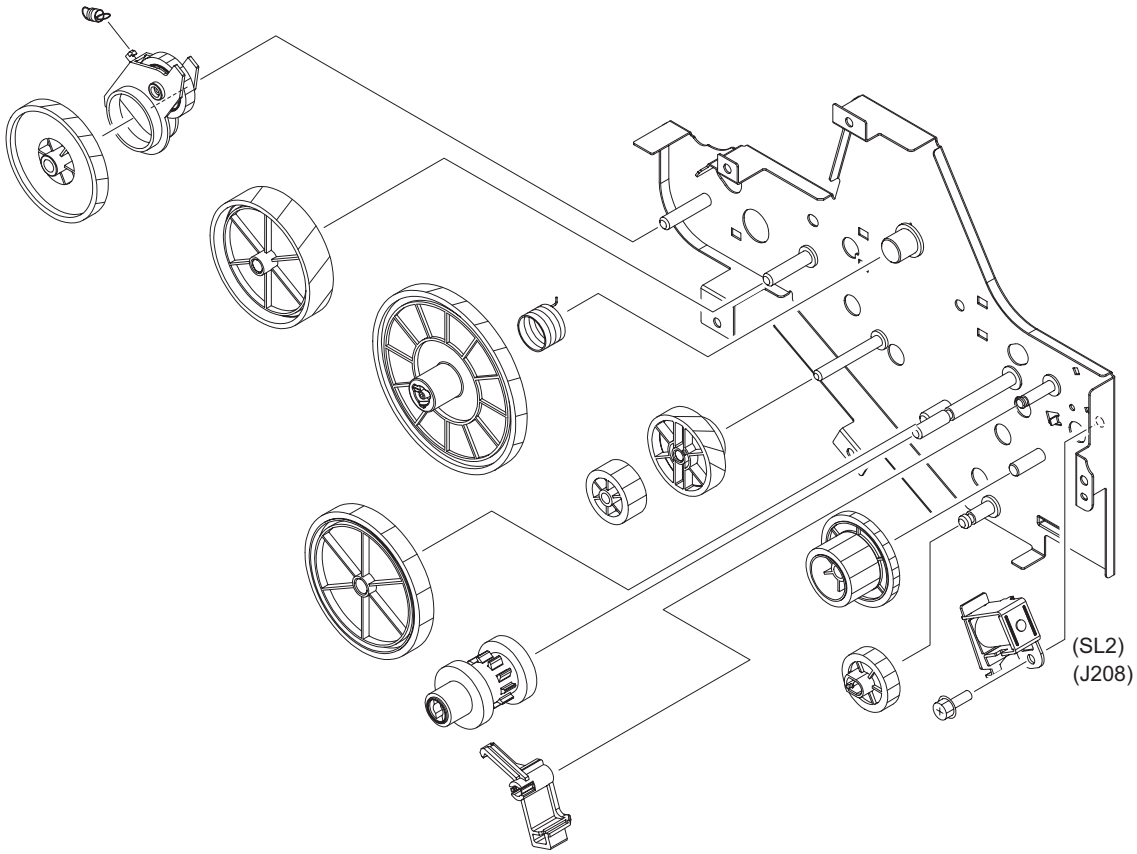

Figure 7-22 Main-drive assembly

Download Free Service Manual and Resetter Printer at http://printer1.blogspot.com

Table 7-18 Main-drive assembly

Ref	Description	Part number	Qty
all	Main-drive assembly	RM1-1299-000CN	1

Download Free Service Manual and Resetter Printer at http://printer1.blogspot.com

Duplexing-drive assembly

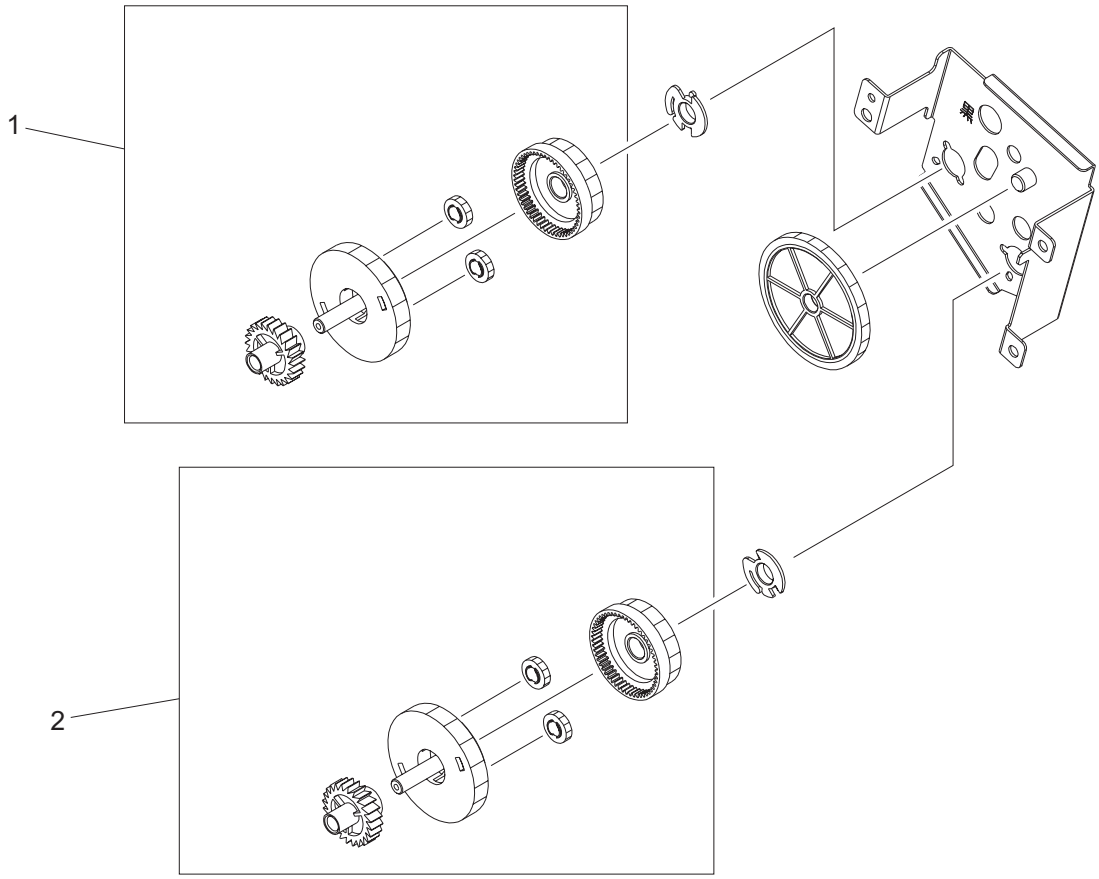

Figure 7-23 Duplexing-drive assembly

Download Free Service Manual and Resetter Printer at http://printer1.blogspot.com

Table 7-19 Duplexing-drive assembly

Ref	Description	Part number	Qty
all	Duplexing-drive assembly	RM1-1302-000CN	1
1	Normal-rotation drive assembly	RM1-1303-000CN	1
2	Reverse-rotation drive assembly	RM1-1304-000CN	1

Download Free Service Manual and Resetter Printer at http://printer1.blogspot.com

Tray 2 cassette and tray 3 cassette/feeder

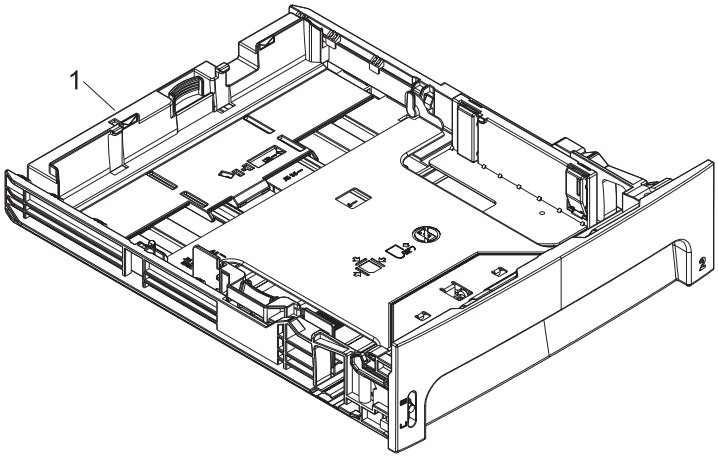

Tray 2 cassette

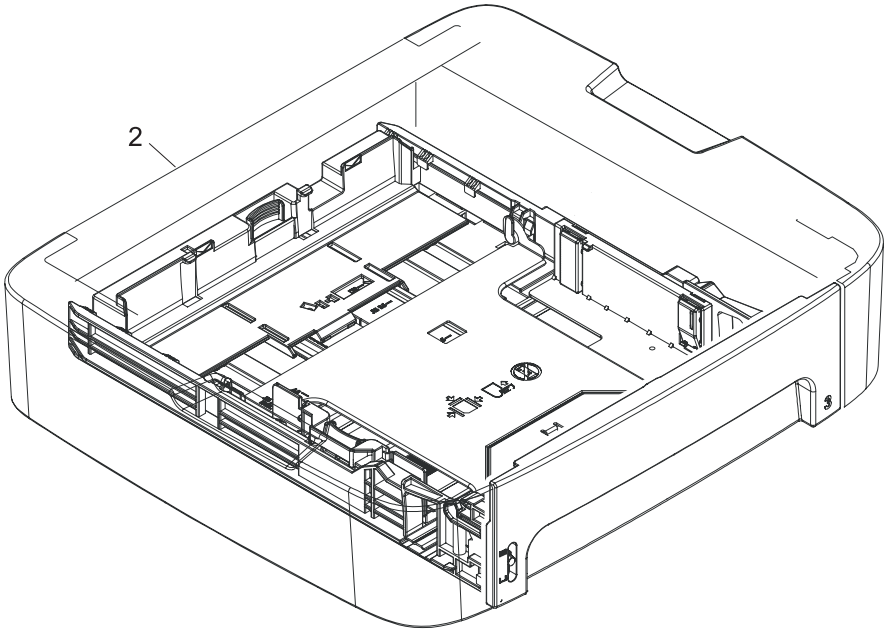

Tray 3 cassette/feeder

Figure 7-24 Tray 2 cassette and tray 3 cassette/feeder

Download Free Service Manual and Resetter Printer at http://printer1.blogspot.com

Table 7-20 Cassette, tray 2 (250-sheet)

Ref	Description	Part number	Qty
1	Cassette, tray 2 (250-sheet)	RM1-1292-000CN	1
2	Cassette/feeder, tray 3 (250-sheet)	Q7556-67901	1

Download Free Service Manual and Resetter Printer at http://printer1.blogspot.com

Duplexing assembly

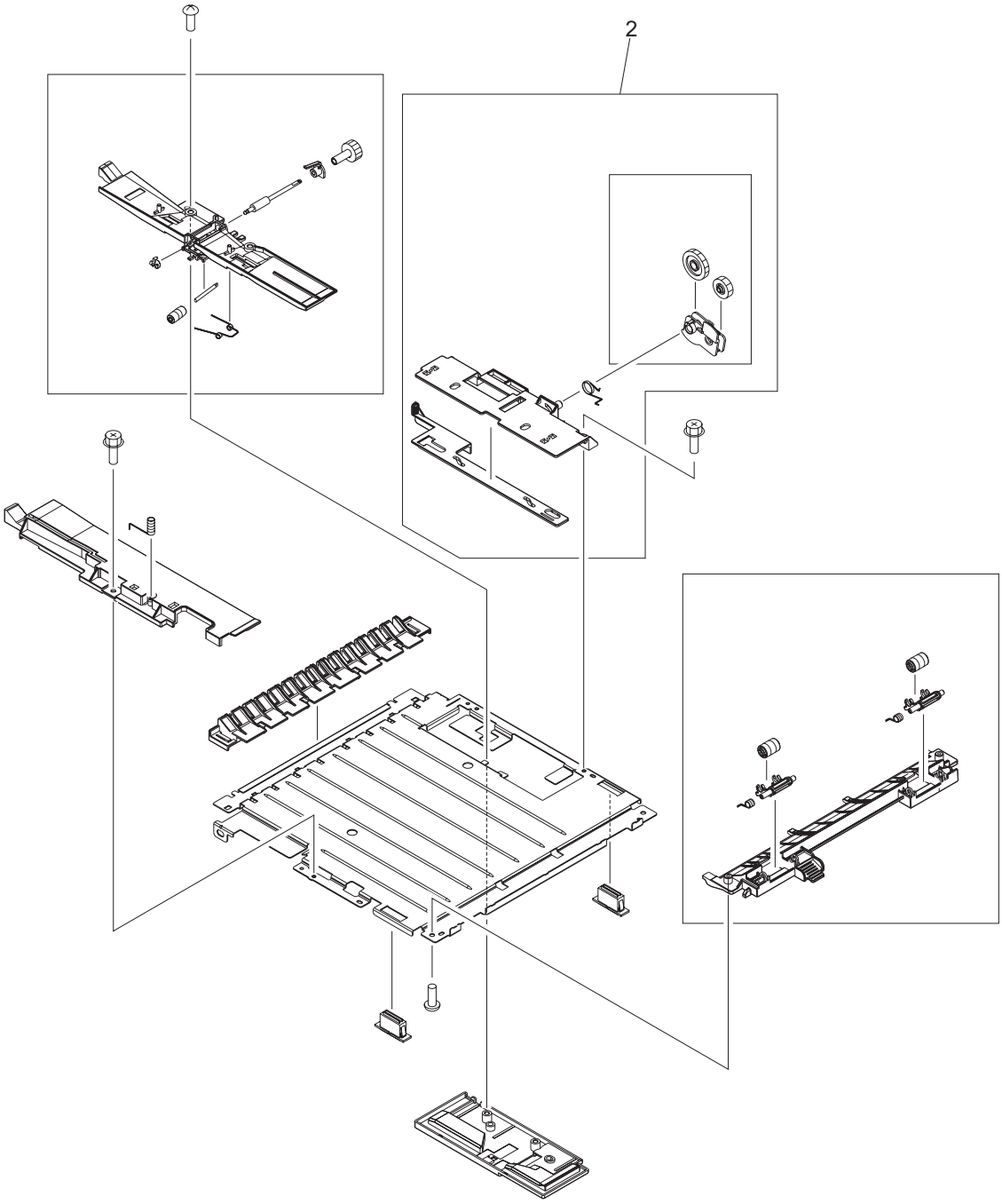

Figure 7-25 Duplexing assembly

Download Free Service Manual and Resetter Printer at http://printer1.blogspot.com

Table 7-21 Duplexing assembly

Ref	Description	Part number	Qty
all	Duplexing assembly	RM1-1313-000CN	1
2	Size change assembly	RM1-1318-000CN	1

Download Free Service Manual and Resetter Printer at http://printer1.blogspot.com

Fuser assembly

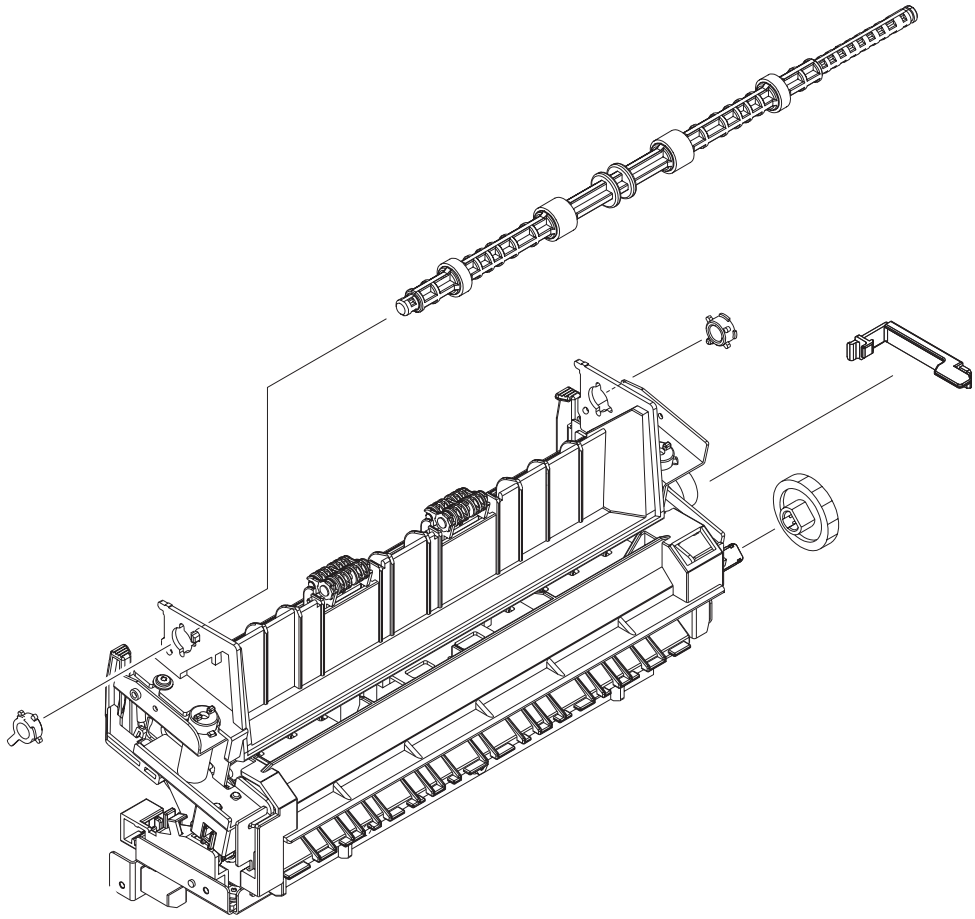

Figure 7-26 Fuser assembly

Download Free Service Manual and Resetter Printer at http://printer1.blogspot.com

Table 7-22 Fuser assembly

Ref	Description	Part number	Qty
all	Fuser (110 to 127 v)	RM1-1289-000CN	1
all	Fuser (220 to 240 v)	RM1-1461-000CN	1

Download Free Service Manual and Resetter Printer at http://printer1.blogspot.com

Alphabetical parts list

Table 7-23 Alphabetical parts list

Description	Part number	Table and page
ADF cleanout part	C7309-40153	ADF components on page 277
ADF cover replacement kit	Q6500-67901	ADF components on page 277
ADF flag replacement kit	Q3948-67902	ADF components on page 277
ADF hinge replacement kit	Q3948-67905	Scanner and ADF assemblies on page 273
ADF pickup roller assembly	5851-2559	ADF components on page 277
ADF PKG FGI ASSY (automatic document feeder)	Q6500-67903	Scanner and ADF assemblies on page 273
ADF separation pad	Q2665-60125	ADF components on page 277
ADF window replacement kit (HP LJ 3390/3392)	Q6500-67904	Scanner components on page 275
Arm, cam	RC1-3544-000CN	Internal components (2 of 4) on page 287
Arm, tag	RC1-3551-000CN	Internal components (2 of 4) on page 287
Bezel, control panel	See Control-panel bezels on page 257.	Scanner components on page 275
Cassette, tray 2 (250-sheet)	RM1-1292-000CN	Cassette, tray 2 (250-sheet) on page 299
Cassette/feeder, tray 3 (250-sheet)	Q7556-67901	Cassette, tray 2 (250-sheet) on page 299
Control panel	Q6500–60104	Scanner components on page 275
Convenience stapler ac inlet cable HP LJ 3392	Q6501-60101	Convenience stapler components (HP LJ 3392 only) on page 279
Convenience stapler cassette (2-pack) HP LJ3392	Q7432–67001	Convenience stapler components (HP LJ 3392 only) on page 279
Convenience stapler cover door HP LJ 3392	RC1-7523-000CN	Convenience stapler components (HP LJ 3392 only) on page 279
Convenience stapler mechanism HP LJ 3392 (replacement)	Q7429-67101	Convenience stapler components (HP LJ 3392 only) on page 279
Convenience stapler power supply bracket and strap HP LJ 3392	Q6500-00006	Convenience stapler components (HP LJ 3392 only) on page 279
Convenience stapler power supply HP LJ 3392	Q7429-60501	Convenience stapler components (HP LJ 3392 only) on page 279

Download Free Service Manual and Resetter Printer at http://printer1.blogspot.com

Table 7-23 Alphabetical parts list (continued)

Description	Part number	Table and page
Cover DIMM	RC1-7510-000CN	External covers and panels on page 283
Cover dummy (stapler plug; HP LJ 3390))	RC1-7512-000CN	External covers and panels on page 283
Cover left	RC1-7509-000CN	External covers and panels on page 283
Cover rear	RC1-3819-000CN	External covers and panels on page 283
Cover right	RC1-7511-000CN	External covers and panels on page 283
Cover top	RC1-7508-000CN	External covers and panels on page 283
Duplexing assembly	RM1-1313-000CN	Duplexing assembly on page 301
Duplexing-drive assembly	RM1-1302-000CN	Duplexing-drive assembly on page 297
Engine-controller PCA (110 to 127 v)	RM1-2566-000CN	Engine-controller assembly on page 293
Engine-controller PCA (220 to 240 v)	RM1-2567-000CN	Engine-controller assembly on page 293
Fan	RK2-0912-000CN	Internal components (2 of 4) on page 287
Flag, paper sensing	RC1-3472-000CN	Internal components (1 of 4) on page 285
Formatter PCA	Q6445-60001	Formatter, LIU, HP jewel, and nameplate on page 281
Front cover assembly	RM1-2643-000CN	External covers and panels on page 283
Fuser (110 to 127 v)	RM1-1289-000CN	Fuser assembly on page 303
Fuser (220 to 240 v)	RM1-1461-000CN	Fuser assembly on page 303
Gear, 19T	RU5-0332-000CN	Internal components (1 of 4) on page 285
Gear, 29T	RM1-1286-000CN	Internal components (1 of 4) on page 285
Guide, cartridge, front	RC1-3844-000CN	Internal components (2 of 4) on page 287
Guide, cartridge, left upper	RC1-3539-000CN	Internal components (2 of 4) on page 287
Guide, dc cable 2	RC1-3731-000CN	Internal components (1 of 4) on page 285
Holder, drawer	RC1-3728-000CN	Internal components (2 of 4) on page 287
Holder, fan	RC1-7514-000CN	Internal components (2 of 4) on page 287

Download Free Service Manual and Resetter Printer at http://printer1.blogspot.com

Table 7-23 Alphabetical parts list (continued)

Description	Part number	Table and page
Holder, tag arm	RC1-35504-000CN	Internal components (2 of 4) on page 287
Input tray assembly LJ3390/3392	Q6500-60119	Scanner and ADF assemblies on page 273
Interlock assembly	RM1-2645-000CN	Internal components (2 of 4) on page 287
Jewel, HP	7121-8043	Formatter, LIU, HP jewel, and nameplate on page 281
Label, clear jam	RC1-7528-000CN	Internal components (3 of 4) on page 289
Label, Fixing (fusing) pressure release	RC1-7529-000CN	Internal components (3 of 4) on page 289
Label, stapler prohibition	RC1-3794-000CN	External covers and panels on page 283
Label, transfer guide open	RC1-3796-000CN	Internal components (3 of 4) on page 289
LIU (line interface unit) EMEA non ROHS	Q3978-60002	Formatter, LIU, HP jewel, and nameplate on page 281
LIU (line interface unit) US/WW non ROHS	Q3977-60001	Formatter, LIU, HP jewel, and nameplate on page 281
LIU/Formatter FFC	Q6500-60111	Formatter, LIU, HP jewel, and nameplate on page 281
Main-drive assembly	RM1-1299-000CN	Main-drive assembly on page 295
Motor, dc (M1)	RK2-0418-000CN	Internal components (4 of 4) on page 291
Nameplate HP LJ 3390	Q6500-4000X	Formatter, LIU, HP jewel, and nameplate on page 281
Nameplate HP LJ 3392	Q6501-4000X	Formatter, LIU, HP jewel, and nameplate on page 281
Normal-rotation drive assembly	RM1-1303-000CN	Duplexing-drive assembly on page 297
Paper-feed guide assembly	RM1-1286-000CN	Internal components (1 of 4) on page 285
Paper-pickup gear assembly	RM1-1301-000CN	Internal components (1 of 4) on page 285
Paper-retaining assembly	RM1-1306-000CN	Internal components (1 of 4) on page 285
Rear cover assembly	RM1-1308-000CN	External covers and panels on page 283
Registration assembly	RM1-1281-000CN	Internal components (3 of 4) on page 289
Reverse-rotation drive assembly	RM1-1304-000CN	Duplexing-drive assembly on page 297

Download Free Service Manual and Resetter Printer at http://printer1.blogspot.com

Table 7-23 Alphabetical parts list (continued)

Description	Part number	Table and page
Roller, face down	RL1-0527-000CN	Internal components (1 of 4) on page 285
Roller, paper pickup	RL1-0540-000CN	Internal components (1 of 4) on page 285
Roller, paper-pickup idler	RC1-3470-000CN	Internal components (1 of 4) on page 285
Roller, transfer	RM1-1471-000CN	Internal components (3 of 4) on page 289
Scanner assembly (laser/scanner)	RM1-1470-000CN	Internal components (2 of 4) on page 287
Screw, RS 3X6	XA9-1495-000CN	Internal components (1 of 4) on page 285
Screw, RS M3X6	XA9-1495-000CN	Internal components (2 of 4) on page 287
Screw, RS M3X6	XA9-1495-000CN	Internal components (3 of 4) on page 289
Screw, RS M3X6	XA9-1495-000CN	Internal components (4 of 4) on page 291
Screw, RS M3X8	XA9-1504-000CN	Internal components (1 of 4) on page 285
Screw, RS M3X8	XA9-1504-000CN	Internal components (2 of 4) on page 287
Screw, RS M3X8	XA9-1504-000CN	Internal components (4 of 4) on page 291
Screw, Tap 3X6	XA9-1503-000CN	Internal components (1 of 4) on page 285
Screw, Tap M3X6	XA9-1503-000CN	Internal components (2 of 4) on page 287
Screw, Tapping truss head M4X10	XB4-5300-805CN	Internal components (1 of 4) on page 285
Screw, Tapping truss head M4X10	XB4-7401-005CN	Internal components (2 of 4) on page 287
Screw, Tapping truss head M4X10	XB4-7401-005CN	Internal components (3 of 4) on page 289
Screw, W/Washer M3X8	XB4-5300-805CN	Internal components (1 of 4) on page 285
Screw, W/Washer M3X8	XA9-1420-000CN	Engine-controller assembly on page 293
Size change assembly	RM1-1318-000CN	Duplexing assembly on page 301
Solenoid	RK2-0910-000CN	Internal components (1 of 4) on page 285
Solenoid (SL1)	RK2-0424-000CN	Internal components (4 of 4) on page 291

Download Free Service Manual and Resetter Printer at http://printer1.blogspot.com

Table 7-23 Alphabetical parts list (continued)

Description	Part number	Table and page
Speaker assembly	RM1-2571-000CN	Internal components (2 of 4) on page 287
Spring, compression	RU5-2323-000CN	Internal components (1 of 4) on page 285
Spring, compression	RU5-2335-000CN	Internal components (2 of 4) on page 287
SSA PKG FGI ASSY (scanner flatbed assembly)	Q3948-67905	Scanner and ADF assemblies on page 273
Top-sensor assembly	RM1-1283-000CN	Internal components (3 of 4) on page 289

Download Free Service Manual and Resetter Printer at http://printer1.blogspot.com

Numerical parts list

Table 7-24 Numerical parts list

Part number	Description	Table and page
5851-2559	ADF pickup roller assembly	ADF components on page 277
7121-8043	Jewel, HP	Formatter, LIU, HP jewel, and nameplate on page 281
C7309-40153	ADF cleanout part	ADF components on page 277
Q2665-60125	ADF separation pad	ADF components on page 277
Q3948-67902	ADF flag replacement kit	ADF components on page 277
Q3948-67905	ADF hinge replacement kit	Scanner and ADF assemblies on page 273
Q3948-67905	SSA PKG FGI ASSY (scanner flatbed assembly)	Scanner and ADF assemblies on page 273
Q3977-60001	LIU (line interface unit) US/WW non ROHS	Formatter, LIU, HP jewel, and nameplate on page 281
Q3978-60002	LIU (line interface unit) EMEA non ROHS	Formatter, LIU, HP jewel, and nameplate on page 281
Q6445-60001	Formatter PCA	Formatter, LIU, HP jewel, and nameplate on page 281
Q6500-00006	Convenience stapler power supply bracket and strap HP LJ 3392	Convenience stapler components (HP LJ 3392 only) on page 279
Q6500-4000X	Nameplate HP LJ 3390	Formatter, LIU, HP jewel, and nameplate on page 281
Q6500-60111	LIU/Formatter FFC	Formatter, LIU, HP jewel, and nameplate on page 281
Q6500-60119	Input tray assembly LJ3390/3392	Scanner and ADF assemblies on page 273
Q6500-67901	ADF cover replacement kit	ADF components on page 277
Q6500-67903	ADF PKG FGI ASSY (automatic document feeder)	Scanner and ADF assemblies on page 273
Q6500-67904	ADF window replacement kit (HP LJ 3390/3392)	Scanner components on page 275
Q6500–60104	Control panel	Scanner components on page 275
Q6501-4000X	Nameplate HP LJ 3392	Formatter, LIU, HP jewel, and nameplate on page 281
Q6501-60101	Convenience stapler ac inlet cable HP LJ 3392	Convenience stapler components (HP LJ 3392 only) on page 279
Q7429-60501	Convenience stapler power supply HP LJ 3392	Convenience stapler components (HP LJ 3392 only) on page 279

Download Free Service Manual and Resetter Printer at http://printer1.blogspot.com

Table 7-24 Numerical parts list (continued)

Part number	Description	Table and page
Q7429-67101	Convenience stapler mechanism HP LJ 3392 (replacement)	Convenience stapler components (HP LJ 3392 only) on page 279
Q7432–67001	Convenience stapler cassette (2-pack) HP LJ3392	Convenience stapler components (HP LJ 3392 only) on page 279
Q7556-67901	Cassette/feeder, tray 3 (250-sheet)	Cassette, tray 2 (250-sheet) on page 299
RC1-3470-000CN	Roller, paper-pickup idler	Internal components (1 of 4) on page 285
RC1-3472-000CN	Flag, paper sensing	Internal components (1 of 4) on page 285
RC1-3539-000CN	Guide, cartridge, left upper	Internal components (2 of 4) on page 287
RC1-3544-000CN	Arm, cam	Internal components (2 of 4) on page 287
RC1-35504-000CN	Holder, tag arm	Internal components (2 of 4) on page 287
RC1-3551-000CN	Arm, tag	Internal components (2 of 4) on page 287
RC1-3728-000CN	Holder, drawer	Internal components (2 of 4) on page 287
RC1-3731-000CN	Guide, dc cable 2	Internal components (1 of 4) on page 285
RC1-3794-000CN	Label, stapler prohibition	External covers and panels on page 283
RC1-3796-000CN	Label, transfer guide open	Internal components (3 of 4) on page 289
RC1-3819-000CN	Cover rear	External covers and panels on page 283
RC1-3844-000CN	Guide, cartridge, front	Internal components (2 of 4) on page 287
RC1-7508-000CN	Cover top	External covers and panels on page 283
RC1-7509-000CN	Cover left	External covers and panels on page 283
RC1-7510-000CN	Cover DIMM	External covers and panels on page 283
RC1-7511-000CN	Cover right	External covers and panels on page 283
RC1-7512-000CN	Cover dummy (stapler plug; HP LJ 3390))	External covers and panels on page 283
RC1-7514-000CN	Holder, fan	Internal components (2 of 4) on page 287

Download Free Service Manual and Resetter Printer at http://printer1.blogspot.com

Table 7-24 Numerical parts list (continued)

Part number	Description	Table and page
RC1-7523-000CN	Convenience stapler cover door HP LJ 3392	Convenience stapler components (HP LJ 3392 only) on page 279
RC1-7528-000CN	Label, clear jam	Internal components (3 of 4) on page 289
RC1-7529-000CN	Label, Fixing (fusing) pressure release	Internal components (3 of 4) on page 289
RK2-0418-000CN	Motor, dc (M1)	Internal components (4 of 4) on page 291
RK2-0424-000CN	Solenoid (SL1)	Internal components (4 of 4) on page 291
RK2-0910-000CN	Solenoid	Internal components (1 of 4) on page 285
RK2-0912-000CN	Fan	Internal components (2 of 4) on page 287
RL1-0527-000CN	Roller, face down	Internal components (1 of 4) on page 285
RL1-0540-000CN	Roller, paper pickup	Internal components (1 of 4) on page 285
RM1-1281-000CN	Registration assembly	Internal components (3 of 4) on page 289
RM1-1283-000CN	Top-sensor assembly	Internal components (3 of 4) on page 289
RM1-1286-000CN	Paper-feed guide assembly	Internal components (1 of 4) on page 285
RM1-1286-000CN	Gear, 29T	Internal components (1 of 4) on page 285
RM1-1289-000CN	Fuser (110 to 127 v)	Fuser assembly on page 303
RM1-1292-000CN	Cassette, tray 2 (250-sheet)	Cassette, tray 2 (250-sheet) on page 299
RM1-1299-000CN	Main-drive assembly	Main-drive assembly on page 295
RM1-1301-000CN	Paper-pickup gear assembly	Internal components (1 of 4) on page 285
RM1-1302-000CN	Duplexing-drive assembly	Duplexing-drive assembly on page 297
RM1-1303-000CN	Normal-rotation drive assembly	Duplexing-drive assembly on page 297
RM1-1304-000CN	Reverse-rotation drive assembly	Duplexing-drive assembly on page 297
RM1-1306-000CN	Paper-retaining assembly	Internal components (1 of 4) on page 285
RM1-1308-000CN	Rear cover assembly	External covers and panels on page 283

Download Free Service Manual and Resetter Printer at http://printer1.blogspot.com

Table 7-24 Numerical parts list (continued)

Part number	Description	Table and page
RM1-1313-000CN	Duplexing assembly	Duplexing assembly on page 301
RM1-1318-000CN	Size change assembly	Duplexing assembly on page 301
RM1-1461-000CN	Fuser (220 to 240 v)	Fuser assembly on page 303
RM1-1470-000CN	Scanner assembly (laser/scanner)	Internal components (2 of 4) on page 287
RM1-1471-000CN	Roller, transfer	Internal components (3 of 4) on page 289
RM1-2566-000CN	Engine-controller PCA (110 to 127 v)	Engine-controller assembly on page 293
RM1-2567-000CN	Engine-controller PCA (220 to 240 v)	Engine-controller assembly on page 293
RM1-2571-000CN	Speaker assembly	Internal components (2 of 4) on page 287
RM1-2643-000CN	Front cover assembly	External covers and panels on page 283
RM1-2645-000CN	Interlock assembly	Internal components (2 of 4) on page 287
RU5-0332-000CN	Gear, 19T	Internal components (1 of 4) on page 285
RU5-2323-000CN	Spring, compression	Internal components (1 of 4) on page 285
RU5-2335-000CN	Spring, compression	Internal components (2 of 4) on page 287
See Control-panel bezels on page 257.	Bezel, control panel	Scanner components on page 275
XA9-1420-000CN	Screw, W/Washer M3X8	Engine-controller assembly on page 293
XA9-1495-000CN	Screw, RS 3X6	Internal components (1 of 4) on page 285
XA9-1495-000CN	Screw, RS M3X6	Internal components (2 of 4) on page 287
XA9-1495-000CN	Screw, RS M3X6	Internal components (3 of 4) on page 289
XA9-1495-000CN	Screw, RS M3X6	Internal components (4 of 4) on page 291
XA9-1503-000CN	Screw, Tap 3X6	Internal components (1 of 4) on page 285
XA9-1503-000CN	Screw, Tap M3X6	Internal components (2 of 4) on page 287
XA9-1504-000CN	Screw, RS M3X8	Internal components (1 of 4) on page 285

Download Free Service Manual and Resetter Printer at http://printer1.blogspot.com

Table 7-24 Numerical parts list (continued)

Part number	Description	Table and page
XA9-1504-000CN	Screw, RS M3X8	Internal components (2 of 4) on page 287
XA9-1504-000CN	Screw, RS M3X8	Internal components (4 of 4) on page 291
XB4-5300-805CN	Screw, W/Washer M3X8	Internal components (1 of 4) on page 285
XB4-5300-805CN	Screw, Tapping truss head M4X10	Internal components (1 of 4) on page 285
XB4-7401-005CN	Screw, Tapping truss head M4X10	Internal components (2 of 4) on page 287
XB4-7401-005CN	Screw, Tapping truss head M4X10	Internal components (3 of 4) on page 289

Download Free Service Manual and Resetter Printer at http://printer1.blogspot.com

Download Free Service Manual and Resetter Printer at http://printer1.blogspot.com

A All-in-one specifications

- Physical specifications
- Supplies specifications
- Performance
- Electrical specifications
- Power consumption
- Environmental specifications
- Acoustic emissions

Download Free Service Manual and Resetter Printer at http://printer1.blogspot.com

Physical specifications

Table A-1 Physical specifications

Model	Height	Depth	Width	Weight
HP LaserJet 3390 all-in-one	523 mm (20.6 inches)	518 mm (20.4 inches)	497 mm (19.6 inches)	26.7 kg (58.8 lb)
HP LaserJet 3392 all-in-one with tray 3 (250-sheet)	570 mm (22.4 inches)	518 mm (20.4 inches)	497 mm (19.6 inches)	29.3 kg (64.5 lb)

Download Free Service Manual and Resetter Printer at http://printer1.blogspot.com

Supplies specifications

Table A-2 Supplies specifications

Item	Description	Part number
Black print cartridge	Average yield for the standard print cartridge is approximately 2,500 pages. Average yield for the high-capacity print cartridge is approximately 6,000 pages Actual yield depends on use.	Q5949A Q5949X
Staple cassette (2 pack)	1,500-staple capacity each	Q7432A

Download Free Service Manual and Resetter Printer at http://printer1.blogspot.com

Performance

Table A-3 Performance

Excellent print quality	• 1200 dots per inch (dpi) with Image REt 2400 text and graphics • Adjustable settings to optimize print quality • The HP UltraPrecise print cartridge has a finer toner formulation that provides sharper text and graphics.
Fax	• Full-functionality fax capabilities with a V.34 fax; includes a phone book, fax polling, and delayed-fax features
Copy	• Includes ADF that accommodates faster, more efficient copy jobs with multiple-page and two-sided documents.
Scan	• The all-in-one provides 1200 ppi, 24-bit full-color scanning from letter/A4-size scanner glass. • Both models include an ADF that accommodates faster, more efficient scan jobs with multiple-page documents.
Staple	• The HP LaserJet 3392 all-in-one includes a convenience stapler for fast and convenient stapling of up to 20 sheets of 80 g/m^2 or 20 lb media at the all-in-one. • The large-capacity replaceable staple cassette holds 1,500 staples.
Networking	• TCP/IP • LPD • 9100
Printer driver features	• Fast printing performance, built-in Intellifont and TrueType scaling technologies, and advanced imaging capabilities are benefits of the PCL 6 printer language.
Automatic language-switching	• The all-in-one automatically determines and switches to the appropriate printer language (such as PS or PCL 6) for the print job.
Interface connections	• Hi-Speed USB 2.0 port • 10/100 ethernet (RJ45) network port
Environmental features	• PowerSave mode • ENERGY STAR qualified
Economical printing	• N-up printing (printing more than one page on a sheet). • Two-sided printing and copying using the automatic duplexer • The Economode setting uses less toner.

Download Free Service Manual and Resetter Printer at http://printer1.blogspot.com

Table A-3 Performance (continued)

Supplies	• A Supplies Status page with a print cartridge gauge shows the supply levels that remain (HP supplies only). • No-shake cartridge design • Authentication for HP print cartridges • Enabled supplies-ordering capability
Accessibility	• Online user guide that is compatible with text screen-readers • Print cartridges can be installed and removed by using one hand. • All doors and covers can be opened by using one hand.

Download Free Service Manual and Resetter Printer at http://printer1.blogspot.com

Electrical specifications

CAUTION Power requirements are based on the country/region where the all-in-one is sold. Do not convert operating voltages. This will damage the all-in-one and void the warranty.

Table A-4 Electrical specifications

Item	110-volt models	220-volt models
Power requirements	110 to 127 V (+/- 10%) 50 / 60 Hz (+/- 2 Hz)	220 to 240 V (+/- 10%) 50 / 60 Hz (+/- 2 Hz)
Rated current (minimum circuit capacity)	4.5 A	2.6 A

Download Free Service Manual and Resetter Printer at http://printer1.blogspot.com

Power consumption

Table A-5 Power consumption (average, in watts)[1]

Model	Printing[2]	Copying[2]	Ready[2]	PowerSave	Off
HP LaserJet 3390 all-in-one and the HP LaserJet 3392 all-in-one	351 W	339 W	15 W	13 W	0 W

1 Values subject to change. See www.hp.com/support/lj3390 or www.hp.com/support/lj3392.

2 Power reported is highest values measured for monochrome printing/copying using all standard voltages.

Download Free Service Manual and Resetter Printer at http://printer1.blogspot.com

Environmental specifications

Table A-6 Environmental specifications

	Operating[1]	Storage[1]
Temperature (all-in-one)	15° to 32.5°C (59° to 90.5°F)	–20° to 60°C (-4° to 140°F)
Relative humidity (all-in-one)	10% to 80% (no condensation)	10% to 90% (no condensation)
Temperature (print cartridge)	same as the all-in-one	-20° to 40°C (-4° to 104°F
Relative humidity (print cartridge)	same as the all-in-one	10% to 90% (no condensation)

[1] Values subject to change. See www.hp.com/support/lj3390 or www.hp.com/support/lj3392.

Download Free Service Manual and Resetter Printer at http://printer1.blogspot.com

Acoustic emissions

Table A-7 Acoustic emissions[1]

Sound Power Level	**Declared per ISO 9296**[2]
Printing (20 ppm)[3]	L_{WAd} = 6.3 Bels (A) [63 dB (A)]
Ready	L_{WAd} = 5.6 Bels (A) [56 dB (A)]
Sound Pressure Level - Bystander Position	**Declared per ISO 9296**[2]
Printing (20 ppm)[3]	L_{pAm} = 49 dB(A)
Ready	L_{pAm} = 38 dB(A)

1 Configuration tested: HP LaserJet 3390/3392 all-in-one
2 Acoustic values are subject to change. See www.hp.com/support/lj3390 and www.hp.com/support/lj3392 for current information.
3 HP LaserJet 3390/3392 all-in-one speed is 22 ppm for letter- and A4-size media.

Download Free Service Manual and Resetter Printer at http://printer1.blogspot.com

Download Free Service Manual and Resetter Printer at http://printer1.blogspot.com

B Warranty information

Download Free Service Manual and Resetter Printer at http://printer1.blogspot.com

Hewlett-Packard limited warranty statement

HP PRODUCT	DURATION OF LIMITED WARRANTY
HP LaserJet 3390/3392 all-in-one	One year limited warranty

HP warrants to you, the end-user customer, that HP hardware and accessories will be free from defects in materials and workmanship after the date of purchase, for the period specified above. If HP receives notice of such defects during the warranty period, HP will, at its option, either repair or replace products which prove to be defective. Replacement products may be either new or equivalent in performance to new.

HP warrants to you that HP software will not fail to execute its programming instructions after the date of purchase, for the period specified above, due to defects in material and workmanship when properly installed and used. If HP receives notice of such defects during the warranty period, HP will replace software which does not execute its programming instructions due to such defects.

HP does not warrant that the operation of HP products will be uninterrupted or error free. If HP is unable, within a reasonable time, to repair or replace any product to a condition as warranted, you will be entitled to a refund of the purchase price upon prompt return of the product.

HP products may contain remanufactured parts equivalent to new in performance or may have been subject to incidental use.

Warranty does not apply to defects resulting from (a) improper or inadequate maintenance or calibration, (b) software, interfacing, parts or supplies not supplied by HP, (c) unauthorized modification or misuse, (d) operation outside of the published environmental specifications for the product, or (e) improper site preparation or maintenance.

TO THE EXTENT ALLOWED BY LOCAL LAW, THE ABOVE WARRANTIES ARE EXCLUSIVE AND NO OTHER WARRANTY OR CONDITION, WHETHER WRITTEN OR ORAL, IS EXPRESSED OR IMPLIED AND HP SPECIFICALLY DISCLAIMS ANY IMPLIED WARRANTIES OR CONDITIONS OF MERCHANTABILITY, SATISFACTORY QUALITY, AND FITNESS FOR A PARTICULAR PURPOSE. Some countries/regions, states or provinces do not allow limitations on the duration of an implied warranty, so the above limitation or exclusion might not apply to you. This warranty gives you specific legal rights and you might also have other rights that vary from country/region to country/region, state to state, or province to province. HP's limited warranty is valid in any country/region or locality where HP has a support presence for this product and where HP has marketed this product. The level of warranty service you receive may vary according to local standards. HP will not alter form, fit or function of the product to make it operate in a country/region for which it was never intended to function for legal or regulatory reasons.

TO THE EXTENT ALLOWED BY LOCAL LAW, THE REMEDIES IN THIS WARRANTY STATEMENT ARE YOUR SOLE AND EXCLUSIVE REMEDIES. EXCEPT AS INDICATED ABOVE, IN NO EVENT WILL HP OR ITS SUPPLIERS BE LIABLE FOR LOSS OF DATA OR FOR DIRECT, SPECIAL, INCIDENTAL, CONSEQUENTIAL (INCLUDING LOST PROFIT OR DATA), OR OTHER DAMAGE, WHETHER BASED IN CONTRACT, TORT, OR OTHERWISE. Some countries/regions, states or provinces do not allow the exclusion or limitation of incidental or consequential damages, so the above limitation or exclusion may not apply to you.

THE WARRANTY TERMS CONTAINED IN THIS STATEMENT, EXCEPT TO THE EXTENT LAWFULLY PERMITTED, DO NOT EXCLUDE, RESTRICT OR MODIFY AND ARE IN ADDITION TO THE MANDATORY STATUTORY RIGHTS APPLICABLE TO THE SALE OF THIS PRODUCT TO YOU.

Download Free Service Manual and Resetter Printer at http://printer1.blogspot.com

Print Cartridge Limited Warranty Statement

This HP product is warranted to be free from defects in materials and workmanship.

This warranty does not apply to products that (a) have been refilled, refurbished, remanufactured, or tampered with in any way, (b) experience problems resulting from misuse, improper storage, or operation outside of the published environmental specifications for the printer product, or (c) exhibit wear from ordinary use.

To obtain warranty service, please return the product to place of purchase (with a written description of the problem and print samples) or contact HP customer support. At HP's option, HP will either replace products that prove to be defective or refund your purchase price.

TO THE EXTENT ALLOWED BY LOCAL LAW, THE ABOVE WARRANTY IS EXCLUSIVE AND NO OTHER WARRANTY OR CONDITION, WHETHER WRITTEN OR ORAL, IS EXPRESSED OR IMPLIED AND HP SPECIFICALLY DISCLAIMS ANY IMPLIED WARRANTIES OR CONDITIONS OF MERCHANTABILITY, SATISFACTORY QUALITY, AND FITNESS FOR A PARTICULAR PURPOSE.

TO THE EXTENT ALLOWED BY LOCAL LAW, IN NO EVENT WILL HP OR ITS SUPPLIERS BE LIABLE FOR DIRECT, SPECIAL, INCIDENTAL, CONSEQUENTIAL (INCLUDING LOST PROFIT OR DATA), OR OTHER DAMAGE, WHETHER BASED IN CONTRACT, TORT, OR OTHERWISE.

THE WARRANTY TERMS CONTAINED IN THIS STATEMENT, EXCEPT TO THE EXTENT LAWFULLY PERMITTED, DO NOT EXCLUDE, RESTRICT OR MODIFY AND ARE IN ADDITION TO THE MANDATORY STATUTORY RIGHTS APPLICABLE TO THE SALE OF THIS PRODUCT TO YOU.

Download Free Service Manual and Resetter Printer at http://printer1.blogspot.com

Extended warranty

HP Care Pack provides coverage for the HP product and all HP-supplied internal components. The hardware maintenance covers a one to three-year period from the date of the HP product purchase. The customer may purchase an HP Care Pack up to one year from the date of purchase of the HP product. For more information, contact the HP Customer Care Service and Support group.

HP Care Pack options might be available after the standard warranty period has expired. Go to http://www.hpexpress-services.com/10467a/ and enter the product number to identify the HP Care Pack options that are available for your product.

Download Free Service Manual and Resetter Printer at http://printer1.blogspot.com

C Regulatory statements

- Declaration of conformity (HP LaserJet 3390, 3392, 3055, and 3050)
- Country/region-specific safety statements

Download Free Service Manual and Resetter Printer at http://printer1.blogspot.com

Declaration of conformity (HP LaserJet 3390, 3392, 3055, and 3050)

Declaration of Conformity
according to ISO/IEC Guide 22 and EN 45014

Manufacturer's Name:	Hewlett-Packard Company
Manufacturer's Address:	11311 Chinden Boulevard, Boise, Idaho 83714-1021, USA

declares, that the product

Product Names:	HP LaserJet 3390, 3392, 3055, and 3050
Regulatory Model Number[3)]	BOISB-0402-03, BOISB-0405-03, and BOISB-0405-04
Toner Cartridges[5)]	Q5949A, Q5949X, and Q2612A
Product Options:	ALL

conforms to the following Product Specifications:

Safety:	IEC 60950-1:2001 / EN60950-1: 2001 \ A11 IEC 60825-1:1993 + A1 +A2 EN 60825-1:1994 + A1 + A2 (Class 1 Laser/LED Product) GB4943-2001
EMC:	CISPR 22:1993+A1+A2 / EN 55022:1994+A1+A2 - Class B[1)] EN 61000-3-2:2000 EN 61000-3-3:1995+A1 EN 55024:1998+A1+A2 FCC Title 47 CFR, Part 15 Class B[2)] / ICES-003, Issue 4 GB9254-1998, GB17625.1-1998
TELECOM	TBR-21:1998; EG 201 121:1998; FCC Title 47 CFR, Part 68[4)]

Supplementary Information:

The product herewith complies with the requirements of the EMC Directive 89/336/EEC, the Low Voltage Directive 73/23/EEC, the R&TTE Directive 1999/5/EC (Annex II), and carries the CE-Marking accordingly.

1) The product was tested in a typical configuration with Hewlett-Packard Personal Computer Systems.

2) This Device complies with Part 15 of the FCC Rules. Operation is subject to the following two Conditions: (1) this device may not cause harmful interference, and (2) this device must accept any interference received, including interference that may cause undesired operation.

3) For regulatory purposes, this product is assigned a Regulatory model number. This number should not be confused with the marketing name or the product number(s).

4) Telecom approvals and standards appropriate for the target countries/regions have been applied to this product, in addition to those listed above.

5) LaserJet 3050 and 3055 cartridge: Q2612A. LaserJet 3390 and 3392 cartridge: Q5949A yields (2500 standard page capacity), or Q5949X (6000 standard page capacity) (declared capacity yield value according to ISO/IEC 19752.)

Boise, Idaho , USA

August 1, 2005

For regulatory topics only:

Australia Contact:	Product Regulations Manager, Hewlett-Packard Australia Ltd., 31-41 Joseph Street, Blackburn, Victoria 3130, Australia
European Contact:	Your Local Hewlett-Packard Sales and Service Office or Hewlett-Packard GmbH, Department HQ-TRE / Standards Europe, Herrenberger Strasse 140, , D-71034, Böblingen, (FAX: +49-7031-14-3143)
USA Contact:	Product Regulations Manager, Hewlett-Packard Company, PO Box 15, Mail Stop 160, Boise, Idaho 83707-0015, , (Phone: 208-396-6000)

Download Free Service Manual and Resetter Printer at http://printer1.blogspot.com

Country/region-specific safety statements

Laser safety statement

The Center for Devices and Radiological Health (CDRH) of the U.S. Food and Drug Administration has implemented regulations for laser products manufactured since August 1, 1976. Compliance is mandatory for products marketed in the United States. The printer is certified as a "Class 1" laser product under the U.S. Department of Health and Human Services (DHHS) Radiation Performance Standard according to the Radiation Control for Health and Safety Act of 1968.

Since radiation emitted inside the printer is completely confined within protective housings and external covers, the laser beam cannot escape during any phase of normal user operation.

WARNING! Using controls, making adjustments, or performing procedures other than those specified in this user guide may result in exposure to hazardous radiation.

Canadian DOC statement

Complies with Canadian EMC Class B requirements.

«Conforme àla classe B des normes canadiennes de compatibilité électromagnétiques (CEM).»

Korean EMI statement

사용시 안내문 (A급 기기)

이 기기는 업무용으로 전자파장해검정를 받은 기기이오니,만약 잘못 구입하셨을 때에는 구입한 곳에서 비업무용으로 교환하시기 바랍니다.

Download Free Service Manual and Resetter Printer at http://printer1.blogspot.com

Finnish laser statement

LASERTURVALLISUUS

LUOKAN 1 LASERLAITE

KLASS 1 LASER APPARAT

HP LaserJet 3390/3392-laserkirjoitin on käyttäjän kannalta turvallinen luokan 1 laserlaite. Normaalissa käytössä kirjoittimen suojakotelointi estää lasersäteen pääsyn laitteen ulkopuolelle.

Laitteen turvallisuusluokka on määritetty standardin EN60825-1 (1994) mukaisesti.

VAROITUS!

Laitteen käyttäminen muulla kuin käyttöohjeessa mainitulla tavalla saattaa altistaa käyttäjän turvallisuusluokan 1 ylittävälle näkymättömälle lasersäteilylle.

VARNING!

Om apparaten används på annat sätt än i bruksanvisning specificerats, kan användaren utsättas för osynlig laserstrålning, som överskrider gränsen för laserklass 1.

HUOLTO

HP LaserJet 3390/3392 -kirjoittimen sisällä ei ole käyttäjän huollettavissa olevia kohteita. Laitteen saa avata ja huoltaa ainoastaan sen huoltamiseen koulutettu henkilö. Tällaiseksi huoltotoimenpiteeksi ei katsota väriainekasetin vaihtamista, paperiradan puhdistusta tai muita käyttäjän käsikirjassa lueteltuja, käyttäjän tehtäväksi tarkoitettuja ylläpitotoimia, jotka voidaan suorittaa ilman erikoistyökaluja.

VARO!

Mikäli kirjoittimen suojakotelo avataan, olet alttiina näkymättömälle lasersäteilylle laitteen ollessa toiminnassa. Älä katso säteeseen.

VARNING!

Om laserprinterns skyddshölje öppnas då apparaten är i funktion, utsättas användaren för osynlig laserstrålning. Betrakta ej strålen.

Tiedot laitteessa käytettävän laserdiodin säteilyominaisuuksista:

Aallonpituus 770-800 nm

Teho 5 mW

Luokan 3B laser

Japan power cord statement

製品には、同梱された電源コードをお使い下さい。
同梱された電源コードは、他の製品では使用出来ません。

Download Free Service Manual and Resetter Printer at http://printer1.blogspot.com

Index

Symbols/Numerics

250–sheet tray. *See* tray 2 or tray 3
600 dpi print-quality setting 211

A

accessibility features 6, 319
accessories, part numbers 254
acoustic emissions 323
activity log, fax
  printing 245
  troubleshooting 225
ADF
  assembly, removing 124
  cleaning pickup-roller assembly 62
  diagrams 269
  installing input tray 23
  jam detection 99
  jams 195
  loading originals 26
  locating 7
  operations 98
  page sizes supported 222
  part numbers 256, 272
  pickup-roller assembly, replacing 50
  troubleshooting 236
after service checklist 109
alert messages, control panel 203
Alerts tab, HP ToolboxFX 71
answering machines, troubleshooting 223
Apple Macintosh. *See* Macintosh
archive print setting 242, 248

B

background, gray 213
bands, troubleshooting 213
battery specifications 36
bezels, control panel
  part numbers 257
  removing 128
billing code report, fax 246
billing filters, fax 104
bins
  jams 187
  locating 7, 8
blank copies, troubleshooting 229
blank pages, troubleshooting 218
blank scans, troubleshooting 232
block diagram, sequence of operations 84
box, unpacking contents 22
buttons, control panel 9

C

cables
  part numbers 254
  stapler, removing 134
  USB and network not included 22
  USB, troubleshooting 219
call report, fax
  printing 245
  troubleshooting 225
Canadian DOC statement 331
capacity, trays 3
cartridge door
  locating 7
  removing 118
cartridges
  alerts 71
  drum rotation test 238
  high-voltage contacts 240
  HP fraud hotline 54
  jams near, clearing 179
  non-HP 54
  pages per 3
  part numbers 254, 317
  recycling 35
  removing 113
  replacing 37
  status page, printing 244
  warranty 327
characters, troubleshooting 214
checklists
  after service 109
  preservice 109
  troubleshooting 174
checks
  drum rotation 238
  engine 238
  half-self-test 239
  heating element 240
  high-voltage power supply 240
circuit diagram 270
classes, HP Technical Training 260
cleaning
  ADF pickup-roller assembly 62
  exterior of all-in-one 56
  flatbed scanner glass 56
  high-voltage connection points 241
  high-voltage contacts 240
  print path 65
  scanner-cover backing 57
  tray 2 pickup roller 58
cleaning page, printing 247
CO operations 100, 104
CODEC circuitry 101
component diagrams
  major 268
Configuration page 244
Configuration page, printing 67
configurations 3

Download Free Service Manual and Resetter Printer at http://printer1.blogspot.com

connectors
formatter 263
LIU 264
control panel
bezel part numbers 257
bezel, removing 128
buttons 9
critical-error messages 209
faceplate, installing 25
HP ToolboxFX settings 78
locating 7
messages 203
removing 128
secondary service menu 242
Service menu 247
troubleshooting display 234
convenience stapler. *See* stapler
copy-quality test 110
copying
media, troubleshooting 227
quality, troubleshooting 226
size, troubleshooting 229
troubleshooting 229
covers
left, removing 116
part numbers 282
print-cartridge door, removing 118
rear, removing 120
right, removing 114
top, removing 122
creases, troubleshooting 215
critical-error messages 209
crooked pages 215, 218
curled media 215, 243
current control, fax line 104
Customer Care Online 259

D

dark copies 227
dc controller 88
declaration of conformity 330
defaults, restoring 243, 247
defects, repetitive 261
Demo page, printing 67, 244
Device information page, HP ToolboxFX 76
device polling 78
dialing
pulse 103
troubleshooting 222
digital subscriber line (DSL), troubleshooting 235
dimensions, all-in-one 316
DIMM door, locating 8
DIMMs
installing 30
part numbers 254
Director, Macintosh 13
display, troubleshooting control panel 234
distinctive ring, setting up 100
documentation 2, 258
dots per inch (dpi)
print settings 211
specifications 318
dots, troubleshooting 213
dpi (dots per inch)
print settings 211
specifications 318
drivers
HP ToolboxFX settings 79
included 3
Linux and UNIX 11
specifications 318
supported 11
drum rotation test 238
DSL, troubleshooting 235
DSP circuitry 101
duplex assembly, removing 142
duplex path jams 190
duplex solenoid, removing 151
duplex-drive gears, removing 150
duplexing assembly, part numbers 300
duplexing-drive assembly, part numbers 296

E

e-mail alerts 71
ECU, removing 160
electrical specifications 320, 321
electrostatic discharge (ESD) 108
embedded Web server (EWS)
browsers supported 12
features 81
Energy Star compliance 318
engine control system 88
engine test 238
engine-controller assembly, part numbers 292
environmental specifications 20, 322
error messages, control panel 203
ESD (electrostatic discharge) 108
Event log 71
extended warranty 328

F

faceplate, installing control panel 25
factory-set defaults, restoring 243, 247
faded print 212
fan, removing 148
fax
activity log 245
billing (metering) tone filters 104
billing code report, printing 246
cables, part numbers 254
call report, printing 245
data path 102
distinctive ring 100
downstream current detection 103
error messages 204
factory-set defaults, restoring 247
flash memory storage 104
hook state 103
hook switch control 103
jams, troubleshooting 224
line current control 103
operations 100
page storage 104
phone book 72
phone book, printing 245
port, locating 9
receive log 75
reports, troubleshooting 225
ring detect 103
safety isolation 102
safety protection circuitry 102
send log 75
T.30 protocol trace report 248

Download Free Service Manual and Resetter Printer at http://printer1.blogspot.com

troubleshooting receiving 220
troubleshooting sending 222
Fax tab, HP ToolboxFX 72
fax-quality test 111
features 3, 318
feed system, ADF 98
feeding problems, troubleshooting 218
Finnish laser statemnet 332
firmware recovery 249
firmware updates 249
flash memory, fax 104
flatbed scanner
cleaning glass 56
loading originals 26
form sensor, ADF 99
formatter
connectors 263
fax subsystem 101
part numbers 280
removing 139
fraud hotline 54
fuser assembly, part number 302
fuser, removing 148, 153

G
Getting Started Guide 2, 258
glass, cleaning 56
gray background, troubleshooting 213
guides, documentation 2

H
half-self-test functional check 239
heating element check 240
Help (Documentation) tab, HP ToolboxFX 75
high-voltage PCA 88
high-voltage power supply, checking 240
hook state 103
hook switch control 103
HP Customer Care Online 259
HP Director, Macintosh 13
HP fraud hotline 54
HP jewel, part number 280
HP Technical Training 260
HP ToolboxFX
Alerts tab 71
Device information page 76
Device Polling 78
driver settings 79
Event log 71
factory-set defaults, restoring 247
Fax tab 72
features 70
Help (Documentation) tab 75
Network Settings tab 79
Paper handling page 77
Paper Types settings 77
Print Quality settings 77
Print Settings tab 78
Printing tab 78
Service tab 78
Status tab 70
system requirements 70
System Settings tab 76
System setup 78
Troubleshooting tab 246
viewing 70
humidity specifications 20, 322

I
identification label 10
image quality
archive print setting 242, 248
cleaning page, printing 247
copy, troubleshooting 226
HP ToolboxFX settings 77
print, troubleshooting 211, 212
repetitive image defects 261
scans, troubleshooting 230, 232
image-formation system
operations 93
testing 239
information pages
Configuration 67, 244
Demo 67, 244
network configuration 69
Supplies Status 244
supplies status 68
T.30 protocol trace report 248
Usage 67
ink cartridges. *See* print cartridges
input trays. *See* trays
installing
ADF input tray 23
control-panel faceplate 25
DIMMs 30
tray 3 23
interface ports
cables, ordering 254
included 5
locating 9, 262
types included 318
interlock assembly, removing 159
internal components 86
internal components, part numbers 284

J
jams
ADF 195
ADF detection operations 99
alerts 71
causes of 177
detection operations 91
duplex path 190
fax 224
locating 178
output bins 187
preventing 177
print-cartridge area 179
stapler 200
straight-through output path 188
trays 181
Japan power cord statement 332
jewel, part number 280

K
keys, control panel 9
Korea EMI statement 331

L
languages, documentation 258
laser safety statements 331
laser/scanner
locating 86
operations 90
removing 144
left cover, removing 116
life expectancies, supplies 34
light copies 227
light print, troubleshooting 212
line current control, fax 104
lines, troubleshooting
copies 226

Download Free Service Manual and Resetter Printer at http://printer1.blogspot.com

printed pages 213
scans 232
LIU
connectors 264
data path operations 102
hook switch control 103
part numbers 280
regional versions 101
ring detect 103
safety isolation 102
safety-protection circuitry 102
loading
originals on flatbed scanner or ADF 26
tray 1 28
tray 2 28
tray 3 28
localized user guides 258
logs, fax
activity 245
billing codes 246
call (last fax sent or received) 245
phone book 245
troubleshooting 225
long-document jams, ADF 99
loose toner, troubleshooting 214

M

Macintosh
drivers supported 11
software components 13
system requirements 21
uninstalling software 15
Macintosh Configure Device 13, 80
main gear assembly, removing 169
main motor, removing 165
main-drive assembly, part numbers 294
major component diagrams 268
manuals 2, 258
media
ADF feeding operations 98
ADF, sizes supported 222
capacity 3
curled, troubleshooting 215, 243
feeding operations 91
HP ToolboxFX settings 77
loading tray 1 28
loading tray 2 28
loading tray 3 28
tray 1 specifications 16
tray 2 or 3 specifications 16
troubleshooting 217
types to avoid 17
wrinkled 215
media jams. *See* jams
memory
base 3
DIMM door, locating 8
error messages 206
flash, fax 104
installing DIMMs 30
NVRAM initialization 242
part numbers 254
memory-tag-reader assembly, removing 146
menus
secondary service 242
Service 247
mercury specifications 36
messages, control panel 203
Microsoft Windows. *See* Windows
model number, locating 10
models, features 3
moisture on the trailing edge, troubleshooting 216
motor, removing main 165
multipurpose tray. *See* tray 2

N

nameplate, part numbers 280
network
configuration page, printing 69
device polling 78
DSL, troubleshooting 235
port, locating 9
Network Settings tab, HP ToolboxFX 79
noise specifications 323
non-HP print cartridges 54

O

off-hook 103
on-hook 103
on/off switch, locating 7
Online Customer Care, HP 259
operating environment, specifications 20, 322
operations
ADF 98
engine control system 88
fax 100
image-formation system 93
internal components 86
laser/scanner system 90
optical system 97
pickup/feed/delivery system 91
sequence of 84
optical system operations 97
options. *See* settings
ordering supplies 34
ordering supplies and accessories 253, 254
output bins
jams 187
locating 7, 8
output quality
archive print setting 242, 248
cleaning page, printing 247
copy, troubleshooting 226
HP ToolboxFX settings 77
print, troubleshooting 211, 212
repetitive image defects 261
scans, troubleshooting 230, 232

P

PABX lines, troubleshooting 235
pages
blank 218
not printing 219
skewed 215, 218
pages per minute 3
paper
ADF feeding operations 98
ADF, sizes supported 222
capacity 3
curled, troubleshooting 215, 243
feeding operations 91
HP ToolboxFX settings 77
loading tray 1 28
loading tray 2 28

Download Free Service Manual and Resetter Printer at http://printer1.blogspot.com

loading tray 3 28
tray 1 specifications 16
tray 2 or 3 specifications 16
troubleshooting 217
types to avoid 17
wrinkled 215
Paper handling page, HP ToolboxFX 77
paper jams. *See* jams
paper path
ADF feeding operations 98
cleaning 65
paper path, cleaning 247
paper-present sensor, ADF 99
part numbers
ADF 272
cables 254
control-panel bezels 257
covers 282
duplexing assembly 300
duplexing-drive assembly 296
engine-controller assembly 292
formatter 280
fuser assembly 302
internal components 284
jewel 280
LIU 280
main-drive assembly 294
memory 254
nameplate 280
scanner 272
screws 271
stapler 278
supplies 254
trays 255, 298
user guides 258
PCAs, diagrams 267
PDEs, Macintosh 14
phone book, fax
HP ToolboxFX tab 72
printing 245
phone numbers
HP fraud hotline 54
HP Printing Supplies Returns and Recycling Program 35
photosensitive drum rotation test 238
physical specifications 316
pickup and feed system
ADF 98
pickup rollers
cleaning ADF 62
cleaning tray 2 58
diagrams 266
part numbers 254
replacing ADF 50
replacing tray 2 42
pickup solenoid, removing from tray 2 169
pickup/feed/delivery system 91
pliers, required 109
polling, device 78
ports
cables, ordering 254
included 5
locating 9, 262
types included 318
post-service tests 110
PostScript driver, HP ToolboxFX settings 79
power
high-voltage PCA 88
requirements 320, 321
sequence of operations 85
testing high-voltage 240
power connector, locating 8
power cords, part numbers 254
power supplies
fax line current control 104
stapler, removing 132
power switch, locating 7
power-switch PCA, removing 138
PowerSave settings 243
preservice checklist 109
print cartridges
alerts 71
drum rotation test 238
high-voltage contacts 240
HP fraud hotline 54
jams near, clearing 179
non-HP 54
pages per 3
part numbers 254, 317
recycling 35
removing 113
replacing 37
status page, printing 244
warranty 327
print drivers
HP ToolboxFX settings 79
print media. *See* media
print path, cleaning 65
print quality
archive print setting 242, 248
cleaning page, printing 247
HP ToolboxFX settings 77
repetitive image defects 261
settings 211
troubleshooting 211, 212
Print Settings tab, HP ToolboxFX 78
print-cartridge door
locating 7
removing 118
print-quality test 110
printer drivers
included 3
Linux and UNIX 11
specifications 318
supported 11
Printing tab, HP ToolboxFX 78
priority input slot. *See* tray 1
problem solving. *See* troubleshooting
PSTN operations 100
pulse dialing 103

Q

quality
archive print setting 242, 248
cleaning page, printing 247
copy, troubleshooting 226
HP ToolboxFX settings 77
print settings 211
print, troubleshooting 211, 212
repetitive image defects 261
scans, troubleshooting 230, 232

R

rear cover, removing 120
rear output bin
jams 188
locating 8
receiving faxes
activity log, printing 245
call report, printing 245
distinctive ring 100

Download Free Service Manual and Resetter Printer at http://printer1.blogspot.com

log, HP ToolboxFX 75
T.30 protocol trace report 248
troubleshooting 220
recovering firmware 249
recycling supplies 35
refilled print cartridges 54
registration-roller assembly, removing 168
regulatory statements 329
removing parts
ADF assembly 124
cautions for 108
checklists 109
control panel and bezel 128
duplex assembly 142
duplex solenoid 151
duplex-drive gears 150
ECU 160
fan 148
formatter 139
fuser 148, 153
interlock assembly 159
laser/scanner 144
left cover 116
main gear assembly 169
main motor 165
memory-tag-reader assembly 146
order of 112
power-switch PCA 138
print cartridges 113
print-cartridge door 118
rear cover 120
registration-roller assembly 168
right cover 114
scanner assembly 126
speaker 136
stapler ac inlet cable 134
stapler assembly 131
stapler power supply 132
stapler power supply bracket and strap 135
tools, required 109
top cover 122
transfer roller 167
repair. *See* service
repetitive defects, troubleshooting 216, 261
replacing
ADF pickup roller 50
DIMMs 30
parts 108
print cartridge 37
separation pads 47
staple cassette 40
supplies, life expectancies 34
tray 2 pickup roller 42
reports, all-in-one
Configuration page 67, 244
Demo page 67, 244
Supplies Status page 68, 244
T.30 protocol trace 248
Usage page 67
reports, fax
activity log 245
billing codes 246
call (last fax sent or received) 245
phone book 245
troubleshooting 225
resolution
print settings 211
specifications 318
restoring factory-set defaults 243, 247
right cover, removing 114
ring detect 103
RING operations 100, 102, 104
rollers
cleaning ADF pickup 62
cleaning tray 2 pickup 58
diagrams 266
locating 86
part numbers 254
removing registration 168
removing transfer 167
repetitive image defects 261
replacing ADF pickup 50
replacing tray 2 pickup 42

S

scanner
assembly, removing 126
cleaning glass 56
diagrams 269
loading originals 26
operations 97
part numbers 256, 272
scanner-cover backing, cleaning 57
scanning
blank pages, troubleshooting 232
quality, troubleshooting 230, 232
speed, troubleshooting 231
scatter, troubleshooting 216
schedules, HP Technical Training 260
screwdrivers, required 109
screws
replacing 108
types of 271
secondary service menu 242
sending faxes
activity log, printing 245
call report, printing 245
log, HP ToolboxFX 75
T.30 protocol trace report 248
troubleshooting 222
sensors
ADF 98
locating 265
media detection 91
separation pads
diagrams 266
part numbers 254
replacing 47
sequence of operations 84
serial number, locating 10
service
HP ToolboxFX settings 78
part numbers 254
secondary menu 242
tools, required 109
Service menu 247
settings
Configuration page 244
factory-set defaults, restoring 243, 247
NVRAM initialization 242
SHUNT function 104
size, all-in-one 316
skewed pages 215, 218
slow speed, troubleshooting
faxing 225
scanning 231

Download Free Service Manual and Resetter Printer at http://printer1.blogspot.com

smeared toner, troubleshooting 214
software
drivers supported 11
HP ToolboxFX 70
Linux and UNIX 11
Macintosh 13
Macintosh Configure Device 80
system requirements 21
uninstalling 15
Windows 12
solenoids 264
speaker, removing 136
specifications
acoustic emissions 323
electrical 320, 321
environmental 322
features 3, 318
physical 316
specks, troubleshooting 213
speed
fax, troubleshooting 225
pages per minute 3
scanning, troubleshooting 231
spots, troubleshooting 213
stall jams, ADF 99
staple cassette
life expectancy 34
part number 254
replacing 40
stapler
ac inlet cable, removing 134
assembly, removing 131
features 5
jams 200
locating 7
part numbers 278
power supply bracket and strap, removing 135
power supply, removing 132
specifications 318
troubleshooting 234
static precautions 108
status
alerts 71
Supplies Status page, printing 68, 244
Status tab, HP ToolboxFX 70
stored fax pages 104
storing
all-in-one 322
fax pages in flash memory 104
supplies 34
streaks, troubleshooting 213
supplies
alerts 71
HP fraud hotline 54
life expectancies 34
non-HP 54
ordering 34, 253
recycling 35
status page 68, 244
storing 34
support, technical 259
switches 265
system requirements 21
System Settings tab, HP ToolboxFX 76
System setup, HP ToolboxFX 78

T

T.30 protocol trace report 248
technical support 259
Technical Training 260
telephone numbers
HP fraud hotline 54
HP Printing Supplies Returns and Recycling Program 35
temperature specifications 20, 322
tests
copy-quality 110
drum rotation 238
engine 238
fax-quality 111
half-self functional check 239
heating element 240
high-voltage power supply 240
post-service 110
print-quality 110
text, troubleshooting 214
TIP operations 100, 102, 104
toner
cleaning page, printing 247
loose, troubleshooting 214
scatter, troubleshooting 216
smeared, troubleshooting 214
specks, troubleshooting 213
toner cartridges. *See* print cartridges
tools, required 109
top cover, removing 122
top output bin, locating 7
trailing edge detection, ADF 99
Training, HP Technical 260
transfer roller, removing 167
tray 1
loading media 28
locating 7
media specifications 16
solenoids 264
tray 2
cleaning pickup roller 58
loading media 28
locating 7
media specifications 16
part numbers 254, 298
pickup solenoid, removing 169
replacing pickup roller 42
separation pad, replacing 47
size specifications 316
solenoids 264
tray 3
installing 23
loading media 28
locating 7
media specifications 16
part number 255
part numbers 254, 256, 298
separation pad, replacing 47
trays
alerts 71
capacity 3
feeding operations 91
feeding problems, troubleshooting 218
installing ADF input 23
jams, clearing 181
locating 7
part numbers 255
troubleshooting
ADF problems 236
blank pages 218
blank scans 232
checklist 174
cleaning page 247

Download Free Service Manual and Resetter Printer at http://printer1.blogspot.com

control panel display 234
control panel messages 203
copy quality 226
copy size 229
copying 229
critical-error messages 209
curled media 215, 243
dialing 222
drum rotation test 238
DSL 235
engine test 238
faded print 212
fax jams 224
fax reports 225
feeding problems 218
half self-test 239
heating element 240
image formation 239
jams 177
lines, copies 226
lines, printed pages 213
lines, scans 232
loose toner 214
moisture on the trailing edge 216
NVRAM initialization 242
PABX lines 235
pages not printing 219
paper 217
print quality 211
receiving faxes 220
repetitive defects 216
scan quality 230, 232
sending faxes 222
skewed pages 215, 218
speed, faxing 225
stapler 234
T.30 protocol trace report 248
text 214
toner scatter 216
toner smear 214
toner specks 213
trays 218
USB cables 219
wrinkles 215
Troubleshooting tab, HP ToolboxFX 246

U

uninstalling software 15
unpacking all-in-one 22
updating firmware 249
Usage page, printing 67
USB port
locating 9
troubleshooting 219
type included 318
User guide
part numbers 258

V

vertical lines, troubleshooting 213
vertical white or faded stripes 226
voltage requirements 320

W

warning messages, control panel 203
warranty
all-in-one 326
extended 328
print cartridges 327
wavy paper, troubleshooting 215
Web sites
documentation 2
HP Printing Supplies Returns and Recycling www.hp.com/go/recycleProgram 35
Linux and UNIX drivers 11
ordering supplies 34, 253
recycling supplies 35
weight specifications 316
white or faded stripes 226
Windows
drivers supported 11
software components 12
system requirements 21
uninstalling software 15
wire harnesses, replacing 108
wrinkles, troubleshooting 215

Download Free Service Manual and Resetter Printer at http://printer1.blogspot.com

Download Free Service Manual and Resetter Printer at http://printer1.blogspot.com

Printed on at least 50% total recycled fiber
with at least 10% post-consumer paper

© 2006 Hewlett-Packard Development Company, L.P.

Printed in the US

www.hp.com

invent

Q6500-90901

Download Free Service Manual and Resetter Printer at http://printer1.blogspot.com